This is a digital copy of a book that was preserved for generations on library shelves before it was carefully scanned by Google as part of a project to make the world's books discoverable online.

It has survived long enough for the copyright to expire and the book to enter the public domain. A public domain book is one that was never subject to copyright or whose legal copyright term has expired. Whether a book is in the public domain may vary country to country. Public domain books are our gateways to the past, representing a wealth of history, culture and knowledge that's often difficult to discover.

Marks, notations and other marginalia present in the original volume will appear in this file - a reminder of this book's long journey from the publisher to a library and finally to you.

Usage guidelines

Google is proud to partner with libraries to digitize public domain materials and make them widely accessible. Public domain books belong to the public and we are merely their custodians. Nevertheless, this work is expensive, so in order to keep providing this resource, we have taken steps to prevent abuse by commercial parties, including placing technical restrictions on automated querying.

We also ask that you:

+ *Make non-commercial use of the files* We designed Google Book Search for use by individuals, and we request that you use these files for personal, non-commercial purposes.
+ *Refrain from automated querying* Do not send automated queries of any sort to Google's system: If you are conducting research on machine translation, optical character recognition or other areas where access to a large amount of text is helpful, please contact us. We encourage the use of public domain materials for these purposes and may be able to help.
+ *Maintain attribution* The Google "watermark" you see on each file is essential for informing people about this project and helping them find additional materials through Google Book Search. Please do not remove it.
+ *Keep it legal* Whatever your use, remember that you are responsible for ensuring that what you are doing is legal. Do not assume that just because we believe a book is in the public domain for users in the United States, that the work is also in the public domain for users in other countries. Whether a book is still in copyright varies from country to country, and we can't offer guidance on whether any specific use of any specific book is allowed. Please do not assume that a book's appearance in Google Book Search means it can be used in any manner anywhere in the world. Copyright infringement liability can be quite severe.

About Google Book Search

Google's mission is to organize the world's information and to make it universally accessible and useful. Google Book Search helps readers discover the world's books while helping authors and publishers reach new audiences. You can search through the full text of this book on the web at `http://books.google.com/`

1837
ARTES VERITAS SCIENTIA
LIBRARY OF THE
UNIVERSITY OF MICHIGAN
E PLURIBUS UNUM
TUEBOR
SI QUAERIS PENINSULAM AMOENAM
CIRCUMSPICE
DEPARTMENT
OF
ENGINEERING

Engineering -
Library
TA
153
.H18

WORKS BY THE SAME AUTHOR

Published by McGRAW-HILL BOOK COMPANY

The Electric Circuit
xv + 229 pages, 6 by 9. Cloth..... $2.00
(Second Edition, entirely rewritten and enlarged)

The Magnetic Circuit
xviii + 283 pages, 6 by 9. Cloth..... $2.00

Published by JOHN WILEY & SONS, Inc.

Experimental Electrical Engineering
Vol. I. xix + 469 pages, 6 by 9, 328 figures. Cloth..... $3.50 net
Vol. II. xiv + 333 pages, 6 by 9, 209 figures. Cloth..... $2.50 net

Engineering Applications of Higher Mathematics
Part I. MACHINE DESIGN. xiv + 69 pages, 5¼ by 8. Cloth..... $0.75 net
Part II. HYDRAULICS. v + 103 pages, 5¼ by 8. Cloth..... $0.75 net
Part III. THERMODYNAMICS. v + 113 pages, 5¼ by 8. Cloth..... $0.75 net
Part IV. MECHANICS OF MATERIALS. v + 81 pages, 5¼ by 8. Cloth..... $0.75 net
Part V. ELECTRICAL ENGINEERING. vii + 65 pages, 5¼ by 8. Cloth..... $0.75 net

Elementary Electric Testing
Loose Leaf Laboratory Manual of the Wiley Technical Series, J. M. Jameson, Editor. 25 direction sheets with numerous diagrams and cuts. Complete in removable paper cover..... $0.50 net

Published by FERDINAND ENKE, STUTTGART

Ueber Mehrphasige Stromsysteme bei Ungleichmässiger Belastung. Paper.... Mk. 2.40

ENGINEERING APPLICATIONS

OF

HIGHER MATHEMATICS

BY

V. KARAPETOFF

PART II.

PROBLEMS ON HYDRAULICS

FIRST EDITION

FIRST THOUSAND

NEW YORK

JOHN WILEY & SONS, INC.

LONDON: CHAPMAN & HALL, LIMITED

1916

COPYRIGHT, 1916,
BY
V. KARAPETOFF

Stanhope Press
F. H. GILSON COMPANY
BOSTON, U.S.A.

PREFACE TO PART II.

Exemplis melius docemur
quam præceptis.

THE first part of this work containing problems in machine design was published in 1912, and the favorable reception accorded it gave the author the courage to publish the rest of the problems which he had collected and used in his classes for some years. The second part contains problems selected from various branches of hydraulics, in the solution of which it is necessary to use calculus and analytic geometry. The remaining three parts of the work contain problems selected from thermodynamics, mechanics of materials, and electrical engineering. In this way, a student or an engineer who wishes to review calculus or analytics, or to acquire facility in applications of higher mathematics to engineering problems, may select at first the part of the work which deals with problems in that branch of engineering with which he is most familiar, or in which he is particularly interested.

The author aimed everywhere to show the student not only the possibilities of the mathematical method in engineering, but by implication to indicate its limitations as well. The prominent French engineer Dupuit has well said: "Formulæ are but tools which may guide intelligence, but can never replace it." May this serve as a warning to both kinds of extremists, those who have no use for higher mathematics in engineering work and those who follow mathematical deductions

295720

blindly, forgetting many practical considerations which cannot be taken account of in formulæ.

The reader will find the author's views on teaching mathematics to engineering students in the preface to Part I and in the Dialogue following that preface. He is also referred to Part I for a list of reference works on mathematics and for an Appendix entitled "What a Senior in Engineering ought to know about Mathematics."

The author wishes to acknowledge gratefully the assistance of his former student, Mr. Fred G. Switzer, M.M.E., who solved most of the problems on hydraulics, and of Mr. A. C. Stevens, M.E., instructor in Cornell University, who read the proofs.

CORNELL UNIVERSITY, ITHACA, N. Y.
October, 1915.

CONTENTS.

Chapter		Page
I.	Water Pressure on Submerged Surfaces	3
II.	Depth of Immersion of Floating Bodies	14
III.	Time of Discharge of Liquids from Vessels	25
IV.	Form of Liquid Jet	43
V.	Problems on Water Supply	58
VI.	Best Form of Channel Section	83
	Appendix	99
	List of Reference Works	103

PART II.

PROBLEMS ON HYDRAULICS.

ENGINEERING MATHEMATICS.

CHAPTER I.

WATER PRESSURE ON SUBMERGED SURFACES.

A PIPE B (Fig. 1) is connected to a reservoir, A, filled with water; the entrance to the pipe is closed with a rectangular valve C. The problem is to determine the total horizontal force F upon the valve due to the hydrostatic pressure of the water in the reservoir.

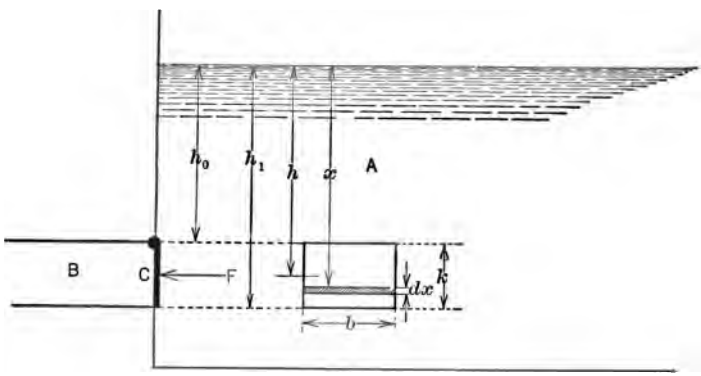

FIG. 1. — A reservoir connected to a pipe.

The fundamental law which obtains in this case is as follows: the force of pressure on an infinitesimal area ds at a depth x from the free surface is equal to the weight of a vertical column of water having ds for its base and x for its height. This force does not depend on the position of the element ds, being the same for vertical, horizontal, or oblique planes, provided they

are all at the same depth x. The plane element, unless it is horizontal, must be infinitesimal, as otherwise x would be different for different parts of the element.

This law may be considered to be a combination of two simple propositions: (1) The pressure at a point in a fluid is the same in all directions; (2) the pressure upon a horizontal plane is equal to the weight of the column of fluid resting upon it.

Applying this law to our case we find that the force acting upon an infinitesimal strip $b \cdot dx$ of the valve is

$$dF = w \cdot x \cdot b\, dx, \quad . \quad . \quad . \quad . \quad . \quad . \quad (1)$$

where w is the weight of a cubic unit of the fluid.* Therefore, total pressure

$$F = \int_{h_0}^{h_1} wxb\, dx = \tfrac{1}{2}\, wb\, (h_1^2 - h_0^2) \quad . \quad . \quad (2)$$

Eq. (2) may be represented in the following form:

$$F = wb\, (h_1 - h_0)\left(\frac{h_1 + h_0}{2}\right),$$

or

$$F = w \cdot bk \cdot h, \quad . \quad . \quad . \quad . \quad . \quad . \quad . \quad . \quad (3)$$

where bk is the area of the valve and h is the distance of its center of gravity from the free surface of the water.

Prob. 1. — What is the total pressure on a valve 40 cm. wide and 30 cm. high, the upper edge being 3 meters below the surface of water? *Ans.* 3750 kg.

Prob. 2. — A rectangular valve of dimensions b and k (Fig. 1) is mounted with its center of gravity h meters below the surface. If the height of the water is increased by 10 per cent, what percentage change must be made in the dimensions of the valve so that (1) the ratio of b and k will not be changed, (2) the total pressure on the valve will be the same as before the change in h.

Ans. 4.66 per cent.

* For the purposes of this work, consider w constant and for water equal to 1000 kg. per cu. m.

Expression (3) may be generalized for any shape of the valve. To prove this, we note that Eq. (1) holds true for any shape of the area if b be considered variable, so that in general Eq. (2) becomes

$$F = w \int_{h_0}^{h_1} xb\,dx. \quad . \quad . \quad . \quad . \quad . \quad (4)$$

But $x \cdot b\,dx$ represents the static moment of the element of area with respect to the free surface of the water. Hence, by the definition of the center of gravity, we have

$$\int_{h_0}^{h_1} xb\,dx = Sh, \quad . \quad . \quad . \quad . \quad . \quad (5)$$

so that

$$F = w\,Sh, \quad . \quad . \quad . \quad . \quad (6)$$

where S is the area of the valve and h is the depth of its center of gravity below the free surface. Expressed in words, Eq. (6) means that the pressure is equal to the weight of a column of water having the area of the immersed surface for its base and the depth of the center of gravity for its altitude.

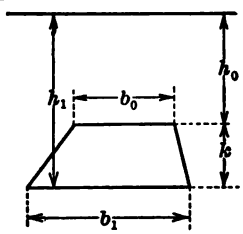

FIG. 2. — A submerged trapezoid.

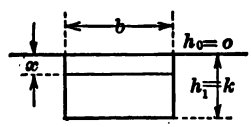

FIG. 3. — A rectangle with its upper edge at the surface of water.

Prob. 3. — Find the total water pressure on each side of an immersed vertical trapezoid (Fig. 2). Consider also the case when the lower base is smaller than the upper.

Ans. $F = \frac{1}{6} wk\,(2\,b_0h_0 + 2\,b_1h_1 + b_0h_1 + b_1h_0)$.

Prob. 4. — A vertical rectangle (Fig. 3) has its upper edge at the surface of the liquid ($h_0 = 0$). At what depth, x, below the surface,

should its lower part be cut off horizontally in order to reduce the total pressure on the remaining upper part to $1/n$ of its former value? Plot and analyze the curve between x and n.

Ans. $x = h_1 \sqrt{1/n}$.

Prob. 5. — Find the value of x in the preceding problem when h_0 is not equal to zero. (This is the general case of Prob. 4. Note that when, in the answer to Prob. 5, $h_0 = 0$, the answer to Prob. 4 is obtained.) *Hint.* — Use Eq. (2).

Ans. $x = \sqrt{h_0^2 + (h_1^2 - h_0^2)/n}$.

Prob. 6. — Solve Prob. 4 when the figure is a triangle with a horizontal base and its vertex is at the surface.

Ans. $x = h_1 \sqrt[3]{1/n}$.

Prob. 7. — Solve Prob. 6 when the base of the triangle is at the surface and the vertex is pointed downward. *Solution.* — Let the area of the original triangle (Fig. 4) be S, and let the distance of the unknown division line from the vertex be y; the original pressure is $F = wS \cdot \frac{1}{3} h_1$, and the pressure on the lower triangle is

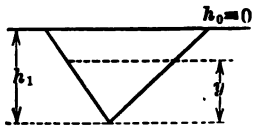

FIG. 4. — A submerged triangle.

$$F_y = w\,(S \cdot y^2/h_1^2)\,(h_1 - \tfrac{2}{3} y).$$

The imposed condition is that $F - F_y = F/n$. Substituting these values of F and F_y, and denoting the ratio of y/h_1 by z, a cubic equation is obtained:

$$2z^3 - 3z^2 + (1 - 1/n) = 0. \quad . \quad . \quad . \quad . \quad . \quad (7)$$

This equation may be solved by means of Cardan's Rule,* by the method of successive approximations if n is given numerically, or graphically (see the following problem).

Prob. 8. — Find graphically the value of z in Eq. (7), for $n = 5$. *Hint.* — Plot $t = (3z^2 - 2z^3)$ to z as abscissæ and find z for which $t = 1 - 1/n = 0.8$. *Ans.* $z = 0.71$.

Prob. 9. — Find the pressure on a segment of a circle (Fig. 5) corresponding to a horizontal chord $2a$ and altitude h. Apply the answer to the special cases, such as $\alpha = 60°$, $90°$, $120°$, and $180°$. *Hint.* — Use Eq. (4) in which b and x must be expressed as functions of α. Integrate with respect to α.

Ans. $F = wr^2 (h_1 - r)(\alpha - \sin\alpha\cos\alpha) + \frac{2}{3} wr^3 \sin^3\alpha$.

Prob. 10. — Same as Prob. 9, except that the segment is part of the parabola $x = ky^2$. *Ans.* $F = \frac{1}{3} kw\,(4h^3h_1 - 3h^4)$.

* See, for instance, Seaver's Mathematical Handbook, page 23.

Formula (6) applies to inclined or horizontal plane surfaces as well as to vertical ones (Fig. 6). The pres-

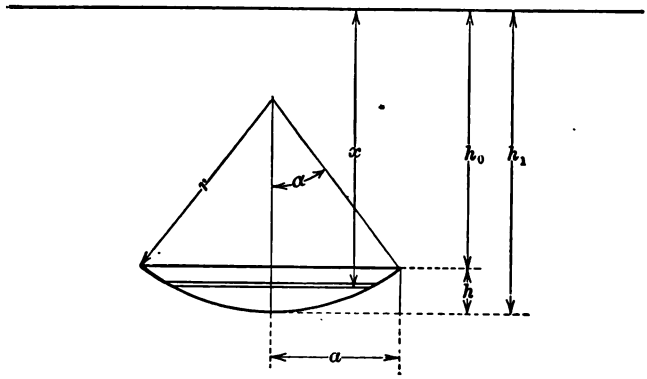

FIG. 5. — A submerged segment of a circle.

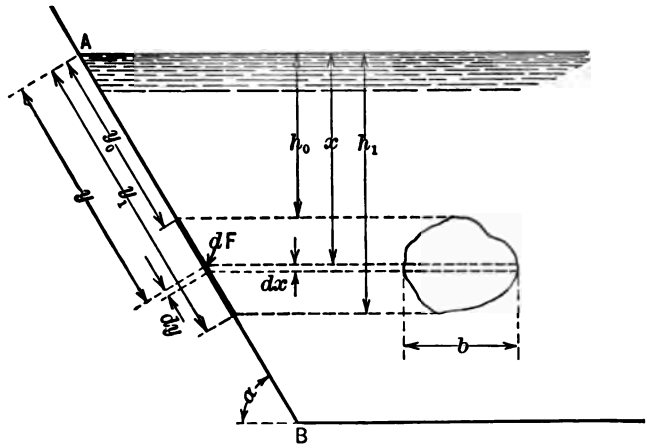

FIG. 6. — Water pressure upon an inclined plane area.

sure on an infinitesimal strip of length b and width dy is

$$dF = w \cdot b\, dy \cdot x, \quad . \quad . \quad . \quad . \quad . \quad (8)$$

so that

$$F = w \int_{x=h_0}^{x=h_1} b\, dy \cdot x. \quad . \quad . \quad . \quad (8a)$$

But the expression under the integral sign is the static

moment of the area with respect to the free surface of the liquid, so that, according to the definition of the center of gravity,

$$F = wSh, \quad . \quad . \quad . \quad . \quad . \quad . \quad . \quad (9)$$

which is identical with Eq. (6). It shows that the total pressure on a plane area is the same as long as its center of gravity is at the same depth, no matter what position the area itself may occupy with respect to the horizontal plane.

When the position of the center of gravity or the pressure F is to be found by integration according to Eq. (8a), it is convenient to eliminate x and to integrate in the plane AB of the immersed surface. We have

$$x = y \sin \alpha,$$

so that

$$F = w \sin \alpha \int_{y_0}^{y_1} by\, dy, \quad . \quad . \quad . \quad . \quad (10)$$

where the integral represents the static moment of the area with respect to the horizontal water edge at A.

Prob. 11. — A rectangle of area S and height k is hinged on its upper side, the hinge being at a distance h_1 below the free surface. Its plane is turned into different positions corresponding to the limits of the angle α from $+90°$ to $-90°$. Find the law according to which the total pressure F varies with α, and sketch the general character of the curve $F = f(\alpha)$. What is the name of the curve? *Ans.* $F = wS\,(h_1 + \frac{1}{2} k \sin \alpha)$.

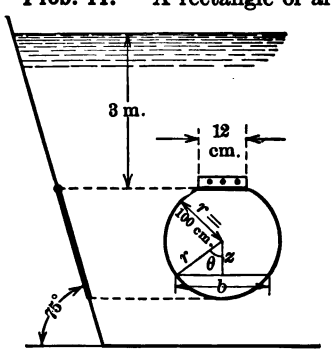

FIG. 7. — A circular valve.

Prob. 12. — Find the total pressure on a valve made according to Fig. 7 and placed at an angle $\alpha = 75°$, so that the hinged edge is 3 meters below the surface of the water. *Ans.* 12,670 kg.

Center of Pressure.

In some hydraulic problems it is of importance to know not only the value of the total pressure of the liquid on an immersed surface, but also the point at which the resultant pressure is applied. This point is called the center of pressure. A little consideration will show that this point always lies below the center of gravity of the area. Let AB (Fig. 8) be a submerged plane area. The total pressure on the surface is equal to the weight of a truncated water-cylinder or prism

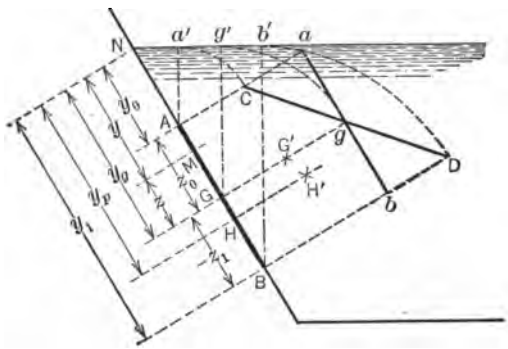

FIG. 8. — Submerged plane area showing center of pressure.

$ACDB$, in which ordinates perpendicular to AB are equal to the vertical distances of the corresponding points of AB from the free surface of the water. Thus, $AC = Aa'$, $BD = Bb'$, $Gg = Gg'$, etc. The volume and the weight of this cylinder are equal to those of the cylinder $AabB$ with parallel bases, provided that the plane ab passes through g, which is the projection of the center of gravity G of the given area AB. This is because the volumes Cag and gDb are equal, and the validity of formula (9) for total pressure F is thus confirmed.

However, the actual distribution of pressure is governed by the cylinder $ACDB$, and not $AabB$; the point of application of the pressure, H, corresponds to the center of gravity H' of the actual cylinder, and not to the center of gravity G' of the equivalent cylinder. Since the actual cylinder of pressure $ACDB$ is always heavier in the part corresponding to the deeper immersion of the area AB (right-hand side in the figure), it will be seen that H is always lower than G. A more rigid proof of this proposition follows from the expression (15) given below, for the distance of the center of pressure from the surface of the liquid.

In order to find this distance y_p (Fig. 8) to the center of pressure, the general method for finding the position of the resultant of any parallel forces is used; namely, the moment of the resultant force with respect to some axis is equated to the sum of the moments of the component forces with respect to the same axis.*

Let the horizontal water edge through N be such an axis. Then the equation of equilibrium is

$$Fy_p = \int_{y_0}^{y_1} y\,dF, \quad . \quad . \quad . \quad . \quad . \quad (11)$$

or, substituting the values of F and dF from Eqs. (8) and (8a), we have

$$y_p \int_{y_0}^{y_1} bx\,dy = \int_{y_0}^{y_1} bxy\,dy.$$

Remembering that $x = y \sin \alpha$, we get

$$y_p \int_{y_0}^{y_1} by\,dy = \int_{y_0}^{y_1} by^2\,dy. \quad . \quad . \quad . \quad (12)$$

* In the following theory it is presupposed that the figure is symmetrical with respect to the axis BN which passes through the center of gravity, so that the center of pressure lies in the same vertical plane with the center of gravity. If the figure is unsymmetrical, two or three equations of equilibrium are necessary. This more general case is not considered here, since it is of less practical interest and leads to more complicated equations.

If the shape of the area is given, b may be expressed as a function of y, so that the integration in Eq. (12) may be performed and y_p determined. As an example, let it be required to find the position of the center of pressure in the vertical rectangle (Fig. 1). Here b in Eq. (12) is constant, and $x = y$; therefore

$$y_p = \frac{\int y^2\,dy}{\int y\,dy} = \frac{2\,(h_1^3 - h_0^3)}{3\,(h_1^2 - h_0^2)} \quad . \quad . \quad . \quad . \quad (13)$$

When $h_0 = 0$, $y_p = \frac{2}{3}\,h_1$. This result is used in hydraulic engineering, in the design of supporting walls, dams, lock gates, etc., where the pressure of water is assumed to be concentrated at a distance of one third of the depth from the bottom.

In expression (12) $\int by\,dy$ is the static moment of the figure with respect to the horizontal water edge N perpendicular to the plane of the paper; $\int by^2\,dy$ is the moment of inertia of the figure with respect to the same axis N. For many symmetrical figures it is easier to find the moment of inertia with respect to the axis passing through the center of gravity of the figure than for any other axis; moreover, for most figures important in practice, the values of the moment of inertia with respect to this latter axis are tabulated in various engineering pocketbooks. For these reasons it is important to establish a relationship between the moment of inertia with respect to an axis passing through the center of gravity of a figure and the moment of inertia with respect to a parallel axis. This is done as follows: Let z denote an ordinate of the figure with respect to the horizontal axis in the

plane of the figure, passing through the center of gravity G (Fig. 8). We have then for any point, such as M, $y = y_g - z$, and $dy = -dz$; so that the expression for the moment of inertia I_N of the figure with respect to the axis N may be written thus:

$$I_N = \int_{y_0}^{y_1} by^2 dy = -\int_{y_0}^{y_1} b(y_g - z)^2 dz = \int_{z_1}^{z_0} b(y_g - z)^2 dz,$$

or, expanding,

$$I_N = y_g^2 \int_{z_1}^{z_0} b\, dz - 2\, y_g \int_{z_1}^{z_0} bz\, dz + \int_{z_1}^{z_0} bz^2\, dz.$$

The three integrals in this equation have the following meaning: the first integral represents the area S of the figure, the second integral is equal to zero according to the definition of the center of gravity; the third one, by definition, is the required moment of inertia I_G with respect to the horizontal axis passing through the center of gravity. Thus, we have

$$I_N = Sy_g^2 + I_G. \quad . \quad . \quad . \quad . \quad . \quad (14)$$

In words: the moment of inertia I_N of a figure with respect to any axis N in its plane is equal to the moment of inertia I_G with respect to the parallel axis passing through the center of gravity *plus* the area of the figure multiplied by the square of the distance between the two axes. Combining now Eqs. (12) and (14) we obtain:

$$y_p S \cdot y_g = Sy_g^2 + I_G,$$

or

$$y_p = y_g + \frac{I_G}{Sy_g}. \quad . \quad . \quad . \quad . \quad . \quad (15)$$

This equation is often convenient for the determination of the center of pressure. Incidentally it shows that the center of pressure is always below the center of gravity, because the last term on the right-hand side of the equation is essentially positive.

Prob. 13. — Show how to obtain result (13) from Eq. (15).

Prob. 14. — Find the position of the center of pressure for an immersed circle. *Solution.* —

$$I_G = 2\int_0^r bz^2\,dz = 4\int_0^r z^2\sqrt{r^2 - z^2}\,dz.$$

Take angle θ (Fig. 7) for the independent variable; then $z = r\cos\theta$; $dz = -r\sin\theta\,d\theta$; hence

$$I_G = 4\int_0^{\pi/2} r^2\cos^2\theta \cdot r\sin\theta \cdot r\sin\theta\,d\theta = \frac{r^4}{2}\int_0^{\pi/2}\sin^2 2\,\theta \cdot d\,(2\,\theta);$$

or

$$I_G = \tfrac{1}{4}\pi r^4.$$

Hence Eq. (15) gives

$$y_p = y_g + \frac{\pi r^4}{4 \cdot \pi r^2 y_g},$$

or

$$y_p = y_g + \frac{r^2}{4\,y_g}.$$

When the upper edge of the circle touches the free surface of the water, $y_g = r$, and

$$y_p = r + \tfrac{1}{4}r = \tfrac{5}{4}r.$$

In other words, the center of pressure lies in this case at a distance of $\frac{1}{4}r$ below the center of the circle. When $y_g > r$ this distance is always less than $\frac{1}{4}r$. At an infinite depth of immersion the center of pressure coincides with the geometric center of the circle.

Prob. 15. — Apply Eq. (15) to a trapezoid (Fig. 2) with horizontal parallel sides, when the upper edge is in the surface of the water ($h_0 = 0$). Simplify the result for the case of (*a*) a rectangle, (*b*) a triangle with the vertex up and (*c*) a triangle with the vertex down.

$$\textit{Ans.}\quad y_g = \frac{k}{2}\left(\frac{b_0 + 3\,b_1}{b_0 + 2\,b_1}\right).$$

Prob. 16. — Solve Prob. 15 when h_0 is not equal to zero.

Prob. 17. — Find the center of pressure for the segment in Prob. 9.

Prob. 18. — Find the center of pressure for the segment in Prob. 10.

CHAPTER II.

DEPTH OF IMMERSION OF FLOATING BODIES.

THE fundamental law which determines the depth of immersion of a floating body is as follows: the weight of the displaced liquid is equal to that of the floating body. This is the necessary and evident result of the condition that the force of gravity be balanced by the upward pressure of the liquid. Let it be required, for instance, to calculate the depth of immersion x, of a vertical log having a cross section of 0.08 sq. m., 2 m. long, and weighing 40 kg. per m. The weight of the displaced water is $x \cdot 0.08 \cdot 1000$ kg. and this must be equal to the weight of the log, which is $40 \cdot 2 = 80$ kg. Or, $x \cdot 0.08 \cdot 1000 = 80$, from which $x = 1$ m.

In order to determine the depth of immersion, when the floating body has a variable horizontal cross section, one has to know the expression for the volume of the immersed part as a function of the depth of immersion. The following problems illustrate the general method, and afford practice in calculus and in analytic geometry.

Prob. 1. — A solid cone of altitude h floats with its apex upward. The weight of the cone is W. Determine the depth of immersion and plot a curve giving the per cent depth as a function of the specific weight of the material. *Solution.* — Let x be the distance from the apex of the cone to the surface of the water, and let v be the total volume of the cone. This volume is later eliminated from the solution. The unknown volume of the part above the water is $v\,(x/h)^3$, because the volumes of similar cones are as the cubes of their altitudes. Therefore, the volume of the immersed

part is $v - v\,(x/h)^3$, and we have the relation $wv\,[1 - (x/h)^3] = W$, where w is the weight of a cubic unit of water. Solving for x gives

$$x = h\sqrt[3]{1 - W/(wv)}.$$

The required depth of immersion is $h - x$ and the specific weight δ of the material of the cone is equal to W/v, so that the equation of the required curve is

$$\frac{h - x}{h} = 1 - \sqrt[3]{1 - \frac{\delta}{w}}.$$

Values of δ are used as abscissæ, and per cent immersion, $(h - x)/h$, as ordinates.

Prob. 1a. — Solve Prob. 1, for a cone floating with its apex downward. *Ans.* $(h - x)/h = \sqrt[3]{\delta/w}$.

Prob. 2. — A prismatic body of specific weight δ and having its cross section shaped according to an ordinary parabola (Fig. 9)

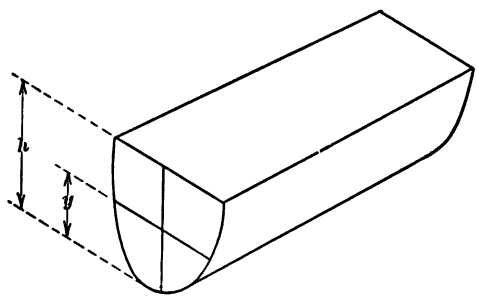

FIG. 9. — A floating parabolic cylinder.

floats horizontally. Prove that the depth of immersion y is determined from the equation

$$\frac{y}{h} = \left(\frac{\delta}{w}\right)^{\frac{1}{3}},$$

where h is the total height of the body.

Prob. 3. — Solve Prob. 2 when the cross section of the floating body is an ellipse, of which the vertical diameter is $2\,h$ and the horizontal diameter is $2\,b$. Deduce an expression for the depth of immersion.

Ans. $\pi\,\delta h/w = [(y-h)/h]\,\sqrt{2\,hy - y^2} + h\sin^{-1}[(y-h)/h] + \frac{1}{2}\,\pi h.$

Prob. 4. — A circular log of diameter 30 cm. and of specific weight equal to 0.6 that of water floats horizontally. Find its

depth of immersion. *Solution.* — The area of the segment corresponding to an angle $2\,\theta$ (Fig. 10) is $r^2\,(\theta - \frac{1}{2}\sin 2\,\theta)$, so that the equation of equilibrium is $1000\,r^2\,(\theta - \frac{1}{2}\sin 2\,\theta) = 0.6 \times 1000 \times \pi r^2$, or

$$\theta - \tfrac{1}{2}\sin 2\,\theta = 0.6\,\pi. \quad . \quad . \quad . \quad . \quad . \quad . \quad (1)$$

This equation can be solved only by trial or by plotting a curve showing values of $[\theta - \frac{1}{2}\sin 2\,\theta]$ and taking the abscissa for which the ordinate is numerically equal to $0.6\,\pi$. While the angle of immersion θ does not depend upon the radius of the log, the depth of immersion x evidently does, because

$$x = r(1 - \cos\theta). \quad . \quad . \quad . \quad . \quad . \quad . \quad . \quad (2)$$

It is left to the student to solve Eq. (1) and to calculate x from Eq. (2). *Ans.* $\theta = 99°$; $x = 17.3$ cm.

Prob. 5. — A hollow cylindrical pontoon of radius r and length l weighs p kg. Deduce the equation of the curve showing the rela-

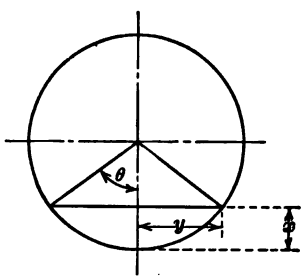

FIG. 10. — Cross section of a floating circular log.

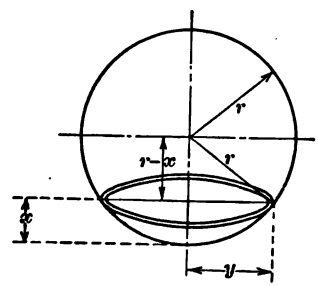

FIG. 11. — A floating sphere.

tion between the depth of immersion and the useful load which the pontoon can carry. Sketch the general character of the curve. *Solution.* — According to the formula used in the preceding problem, the weight of the displaced liquid is $wlr^2\,(\theta - \frac{1}{2}\sin 2\,\theta)$, and this must be equal to $p + P$, where P is the useful load on the pontoon. Angle θ may be eliminated and expressed through the depth of immersion x by means of formula (2) of the previous problem.

Prob. 6. — A sphere of radius r and weight Q is floating in a fluid of specific weight w. Find the depth of immersion. *Solution.* — The volume of an infinitesimal horizontal slice (Fig. 11) of radius y is $dV = \pi y^2\,dx$, where $y^2 = r^2 - (r - x)^2 = 2\,rx - x^2$. Substitut-

ing this value of y^2 and integrating the expression for dV to find the volume of the immersed segment, we obtain

$$V = \int_0^x \pi (2rx - x^2)\, dx = \pi x^2 \left(r - \frac{x}{3}\right),$$

so that the equation of equilibrium becomes

$$w\pi x^2 \left(r - \frac{x}{3}\right) = Q.$$

This is a cubic equation which may be solved by Cardan's rule; in numerical applications it may also be solved by successive approximations, or graphically, by plotting expressions $x^2 r$ and $\frac{1}{3} x^3$ to x as abscissæ.

Prob. 7. — Solve the preceding problem when the floating body is an ellipsoid with semi-axes a, b and c, the axis c being vertical.

Solution. — The equation of the ellipsoid is

$$\frac{x^2}{a^2} + \frac{y^2}{b^2} + \frac{z^2}{c^2} = 1. \quad . \quad . \quad . \quad . \quad . \quad . \quad . \quad . \quad (3)$$

All horizontal cross sections of the ellipsoid are ellipses. Let the horizontal cross section at a distance z from the center have semi-axes p and q. Then its equation is

$$\frac{x^2}{p^2} + \frac{y^2}{q^2} = 1, \quad . \quad . \quad . \quad . \quad . \quad . \quad . \quad . \quad . \quad (4)$$

and the volume of an infinitesimal horizontal slice of thickness dz is $dv = \pi pq\, dz$. The volume of the immersed part is

$$V = \pi \int_c^{+z} pq\, dz. \quad . \quad . \quad . \quad . \quad . \quad . \quad . \quad . \quad (5)$$

The limits of integration correspond to the case when more than one half of the body is under water. If the value of z in Eq. (7), below, should come out negative, it would show that less than one half of the ellipsoid is immersed.

Before integrating Eq. (5) it is necessary to express p and q through z. Assuming z in Eq. (3) to be constant, gives the cross section corresponding to Eq. (4), so that Eqs. (3) and (4) become identical. But Eq. (3) may be represented in the form

$$\frac{x^2 c^2}{a^2 (c^2 - z^2)} + \frac{y^2 c^2}{b^2 (c^2 - z^2)} = 1,$$

so that

$$p = \frac{a}{c} \sqrt{c^2 - z^2}; \quad q = \frac{b}{c} \sqrt{c^2 - z^2}.$$

Substituting these values in Eq. (5) gives

$$V = \frac{\pi ab}{c^2}\int_{-c}^{+z}(c^2 - z^2)\,dz = \frac{\pi ab}{c^2}\left\{c^2 z - \frac{z^3}{3}\right\}_{-c}^{+z},$$

or

$$V = \frac{\pi ab}{c^2}\left\{c^2 z - \frac{z^3}{3} + \frac{2}{3}c^3\right\}. \quad . \quad . \quad . \quad . \quad . \quad (6)$$

The equation of equilibrium is

$$Q = wV, \quad . \quad . \quad . \quad . \quad . \quad . \quad . \quad . \quad . \quad (7)$$

from which z can be determined.

Prob. 8. — Plot a curve showing the relation between the specific weight and the depth of flotation of the ellipsoid considered in the preceding problem. Take the dimensions of the ellipsoid to be $a = 3$ m.; $b = 2.2$ m.; $c = 1.8$ m.; the limits of specific weight to be 200 and 1000 kgs. per cu. m., and the liquid to be water.

Ans. $\delta = 200;\ z = -0.66.$
$\delta = 600;\ z = +0.25.$
$\delta = 800;\ z = +0.77.$

Prob. 9. — Show that when $a = b = c$, the solution indicated in Prob. 7 gives the same result as in Prob. 6. *Hint.* — Note that the limits of integration are taken differently in the two problems.

Prob. 10. — Solve Prob. 5 for a cylindrical pontoon with hemispherical ends.

Ans. $p + P = w\{lr^2 \cos^{-1}[(r - x)/r] - l(r - x)\sqrt{2rx - x^2}$
$+ \pi x^2 (r - \frac{1}{3}x)\}.$

Prob. 11. — A hypothetical highly compressible fluid has specific weight equal to 0.5 on the surface and to 1.6 at a depth of 3 m., the density increasing uniformly with the depth. Determine the depth to which a parallelopiped of height 1 m. would sink in such a fluid, its specific weight being 1.15. *Solution.* — The specific weight at a depth x is $\delta = 0.5 + \frac{1}{3}(1.6 - 0.5)\,x = 0.5 + 0.367\,x$. Therefore, if the bottom of the parallelopiped is at a depth z it displaces a weight of the liquid equal to

$$\int_{z-1}^{z} A\,dx \cdot \delta,$$

where A is the horizontal area of the body. This weight must be equal to the weight $1.15\,A \cdot 1$ of the parallelopiped itself. Thus,

$$\int_{z-1}^{z}(0.5 + 0.367\,x)\,dx = 1.15.$$

After integration, this expression is reduced to $0.5 \cdot 1 + \frac{1}{2} \cdot 0.367 (2z - 1) = 1.15$, from which $z = 2.27$ m.

Note. — Since the density of the fluid varies in this case according to the straight-line law, the integration, strictly speaking, is not necessary, and the law of averages may be directly applied. Namely, the *average* density of the displaced fluid is at the center level of the parallelopiped, and this average density must be equal to the density of the body itself. Thus, we get $0.5 + 0.367\,x = 1.15$, whence $x = 1.77$ m. The depth of immersion of the bottom of the parallelopiped is therefore $z = x + 0.5 = 2.27$ m., or the same result as before. When the density varies according to a more general law than the straight-line law, or when the body is of a variable cross section not symmetrical with respect to the middle horizontal plane, an integration is necessary in order to obtain an expression for the weight of the displaced liquid.

Prob. 12. — A very light sphere of radius r must be immersed in the liquid given in the preceding example. Plot a curve showing the weight W of shot to be put into the sphere for various depths of submersion, including also partial immersion.

Ans. From $x = 0$ to $x = 2r$, $W = \pi x^2 \{0.5\,r + x\,(0.245\,r - 0.167) - 0.092\,x^2\}$;

From $x = 2r$ to $x = \infty$, $W = \frac{4}{3}\pi r^3 \{0.5 + 0.367\,(x - r)\}$.

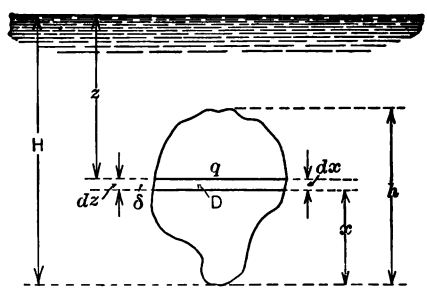

FIG. 12. — A submerged body of irregular shape.

Prob. 13. — A given irregular body (Fig. 12) is determined by the relation $q = f(x)$, where q is a horizontal cross section and x is the distance of this cross section from the bottom of the body. The density δ of the liquid is given as a function of the depth z thus: $\delta = \phi(z)$. It is required to establish a relationship between the uniform density D of the body and its depth of submersion.

Solution. — The mass of the fluid displaced by an infinitesimal slice of the body at the depth z is $q\delta \cdot dz$; the mass of the corresponding part of the solid is $qD\,dx$. Hence, the equation of equilibrium is

$$\int_{H-h}^{H} \delta q\,dz = D \int_0^h q\,dx.$$

In the left-hand member of this equation q must be expressed as a function of $z = H - x$, in order to be able to integrate. Then the foregoing equation becomes

$$\int_{H-h}^{H} \phi(z) f(H - z)\,dz = D \int_0^h f(x)\,dx.$$

In integrating this equation the depth H is to be considered constant; the result is an equation from which the required depth H may be determined.

Prob. 14. — Apply the solution given in Prob. 13 to the case when the immersed solid is a body generated by revolving an arc of the cubic parabola $x = ay^3$ about the vertical x-axis, and $\delta = \phi(z) = \delta_0 + bz + cz^2$.

Ans. $3\,ch^2/11 - 3\,h\,(b + 2\,c)/8 + 3/5 + 3\,\delta_0/5 + 3\,Hb/5 + 3\,H^2c/5 = 0.$

When the floating body is of an irregular shape which cannot be expressed by an equation, the volume of its immersed part can be calculated only approximately, by subdividing it into a large number of thin horizontal slices. An important case of this kind is that of a ship, when it is necessary to calculate its displacement. Let the hull be subdivided by equidistant horizontal planes at a distance h from each other, beginning from the keel. Let $A_0, A_1, \ldots, A_n$ be the areas of these cross sections, or water planes, as they are called. For the sake of convenience let these areas be plotted as ordinates to the distances h, $2\,h$, $3\,h$, etc., as abscissæ (Fig. 13). Connecting the ends of these ordinates by a smooth curve one can obtain graphically the areas of intermediate water planes. The volume of water dis-

placed by the ship at a draft OC is equal to the area $OABC$, because this area represents the expression

$$V = \int_{x=0}^{x=OC} A\,dx.$$

In this expression $A\,dx$ is the volume of an infinitesimal slice of height dx. The integration may be performed graphically by means of a planimeter.

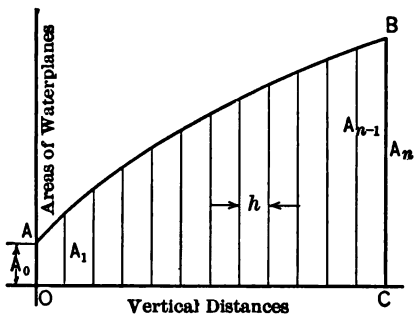

FIG. 13. — Areas of water planes plotted against distances from the bottom of the ship.

Multiplying the volume of the displaced water by the weight of one cubic unit of water, one obtains the weight of the displaced water and consequently the weight of the ship itself with its cargo. Repeating similar calculations for different values of draft OC, a new curve may be plotted giving displacement in metric tons to draft in meters as abscissæ. From this curve it is possible to determine the draft of the ship with a given cargo.

If it is preferred to determine displacements analytically, without plotting the curve shown in Fig. 13, a certain law must be assumed according to which the areas vary between each two consecutive measured ordinates.

The simplest law is that of a straight line, so that each strip in Fig. 13 becomes a trapezoid. The areas of these trapezoids are $\frac{1}{2} h (A_0 + A_1)$, $\frac{1}{2} h (A_1 + A_2)$, . . . , $\frac{1}{2} h (A_{n-1} + A_n)$, and their sum is

$$V = h \{\tfrac{1}{2} A_0 + A_1 + \cdots + A_{n-1} + \tfrac{1}{2} A_n\}. \quad . \quad (8)$$

This formula is known as the trapezoidal formula, and is accurate enough for many practical applications. However, when extreme accuracy is required, or when the cross section of the immersed body changes rather rapidly with the depth, areas must be computed for a large number of water planes. A more accurate formula which requires fewer terms is obtained by regarding the curve between each three consecutive ordinates in Fig. 13 as the arc of a parabola the axis of which is parallel to the axis of ordinates (Fig. 14). It may be proved (see Prob. 17 below) that the area of two adjacent strips of equal width h is

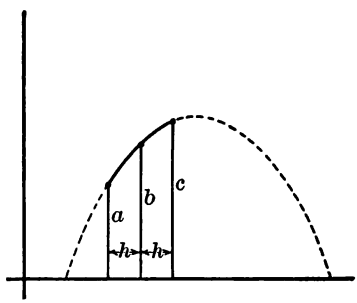

FIG. 14. — A parabola used to deduce Simpson's rule.

$$v = \tfrac{1}{3} h (a + 4 b + c). \quad . \quad . \quad . \quad . \quad (9)$$

Therefore, assuming the number of strips in Fig. 13 to be even, and adding the above expressions for every two consecutive strips, we obtain:

$$V = \tfrac{1}{3} h [A_0 + 4 (A_1 + A_3 + A_5 + \cdots + A_{n-1}) + 2 (A_2 + A_4 + \cdots + A_{n-2}) + A_n]. \quad . \quad (10)$$

This formula is known as Simpson's rule, and is widely used in engineering practice.

Prob. 15. — The areas of water planes of a ship are as follows:

Water plane No.	0	½	1	2	3	4	5	6	7
Area in sq. m.	20	237	333	450	516	556	583	605	620

Cross sections are drawn every meter; water plane No. 0 corresponding to the keel, and No. 7 to a draft of 7 m. Calculate the volume of displaced water by means of Simpson's formula and determine the per cent error if formula (8) is used. *Note.* — Water plane No. ½ is introduced because the area changes more than ten times between Nos. 0 and 1. In using Simpson's formula apply it between Nos. 1 and 7, and add the area between Nos. 0 and 1 determined according to formula (9). The same remark applies to the use of formula (8).

Ans. 3415 cu. m.; 0.64 per cent.

Prob. 16. — Using the data of the preceding problem determine the weight of the ship plus its cargo for drafts of 7, 5, 3, and 1 m., and plot these weights in metric tons to drafts as abscissæ. The weight of salt water is 1026 kg. per cu. m. One metric ton is equal to 1000 kg. *Ans.* 3504; 2265; 1129; 222.

Prob. 17. — Prove formula (9). *Solution.* — The parabola in Fig. 14 is turned into its usual position (Fig. 15) corresponding to the standard formula $y^2 = 2\,px$. The area of an infinitesimal horizontal strip is $(m - x)\,dy = (m - y^2/2\,p)\,dy$, so that the area between b and c is

$$v_1 = \int_k^g \left(m - \frac{y^2}{2\,p}\right) dy = (g - k)\,m - h\frac{g^3 - k^3}{6\,p} = hm - h\frac{g^2 + k^2 + gk}{6\,p}.$$

By analogy, for the strip between a and b we have

$$v_2 = hm - h\,\frac{f^2 + g^2 + gf}{6\,p}.$$

Adding these two expressions, we get for the total area between a and c:

$$v = \frac{1}{3}h\left(6\,m - \frac{k^2 + 2\,g^2 + f^2 + g\,(k + f)}{2\,p}\right)$$

or, since $\frac{1}{2}\,(k + f) = g$,

$$v = \frac{1}{3}h\left(6\,m - \frac{k^2 + 4\,g^2 + f^2}{2\,p}\right).$$

But the extremities of the ordinates k, g, and f lie on the parabola, so that

$$k^2 = 2p(m-c); \quad g^2 = 2p(m-b); \quad f^2 = 2p(m-a).$$

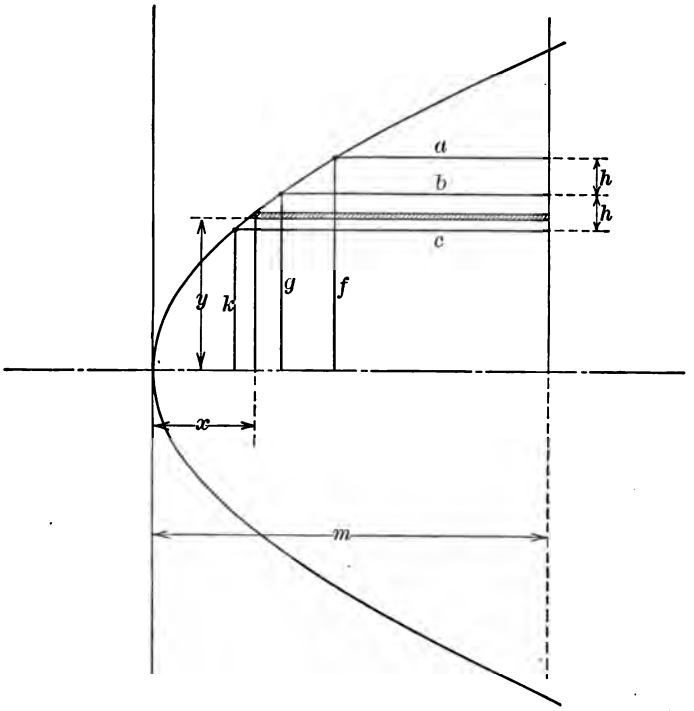

FIG. 15. — A parabola used to prove formula (9).

Substituting these values in the expression for v, we get

$$v = \tfrac{1}{3}h\,[6m - (m-c) - 4(m-b) - (m-a)],$$

and after reduction we obtain Eq. (9).

Prob. 18. — Prove Eq. (9) using the equation of the parabola in its original position, as in Fig. 14.

CHAPTER III.

TIME OF DISCHARGE OF LIQUIDS FROM VESSELS.

In some practical problems it is necessary to calculate the time in which a given vessel or a storage reservoir (Fig. 16) may be emptied, or the level of the liquid lowered to a given height.

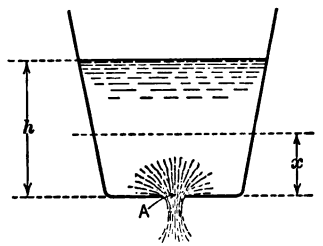

Fig. 16. — A vessel being emptied through an orifice in the bottom.

The case of discharge taking place through a small orifice in the bottom of the vessel is theoretically the simplest, because (1) the pressure of the liquid, or the head, is the same at all parts of the opening; (2) the orifice being small, the remainder of the fluid may be considered at rest. The fundamental law of discharge in this case, the so-called Torricelli's theorem, is expressed by the equation

$$v = \sqrt{2gh}, \quad . \quad . \quad . \quad . \quad . \quad . \quad (1)$$

where v is the velocity of discharge, h the distance to the free surface of the liquid (head), and g is the acceleration due to gravity. If h is in cm., and g in cm. per (second)^2, v is in cm. per second. The identity of the physical dimensions on both sides of the equation is satisfied because

$$\frac{\text{cm.}}{\text{sec.}} = \sqrt{\frac{\text{cm.}}{(\text{sec.})^2} \times \text{cm.}}$$

Formula (1) follows directly from the law of the conservation of energy. When a particle of liquid of mass m is at the surface of the liquid in the tank, this particle possesses a potential energy $mg \cdot h$, with respect to the bottom of the vessel. During the discharge all this energy is converted into the kinetic energy $\frac{1}{2} mv^2$. Equating the two gives

$$mgh = \tfrac{1}{2} mv^2,$$

from which Eq. (1) follows directly.

Velocity v multiplied by the cross section A of the orifice gives the theoretical discharge vA, or the quantity of liquid passing through the orifice in unit time. In reality, the discharge may be considerably smaller, due to liquid friction and to a contraction in the issuing vein. Therefore, the product vA is generally multiplied by an empirical coefficient c, less than unity, and the actual discharge is represented by the semi-empirical formula

$$Q = cAv = cA\sqrt{2gh}. \quad . \quad . \quad . \quad . \quad (2)$$

Here c is the so-called coefficient of discharge, which has been determined experimentally for various cases of discharge. In all the numerical problems below we shall assume $c = 0.60$, though in actual practice the student should consult an engineering handbook for the value of c which applies to his particular problem. There are two reasons why the actual discharge is less than the theoretical: (*a*) The issuing particles do not move in parallel paths, but form the so-called contracted vein, so that the actual cross section is less than that of the orifice; (*b*) part of the potential energy mgh is wasted in eddies formed near the orifice, so that the actual velocity of discharge is less than that given by Eq. (1).

The simplest case to be considered here is that of a prismatic or cylindrical vessel. Let the original level of the liquid be h_1 above the orifice; let the final level be h_2, and let the level be x above the orifice at a time t. During an infinitesimal interval of time, dt, a quantity $Q\,dt$ of the liquid flows out, and as a result the level sinks by dx. Hence, if the area of the horizontal cross section of the vessel is F, we have the differential equation:

$$cA\sqrt{2gx}\,dt = -F\,dx. \quad . \quad . \quad . \quad . \quad (3)$$

It is important to note the minus sign on the right-hand side of the equation. The height x decreases with the time, hence dx is a negative quantity. But the left-hand side is essentially positive. Therefore, in order to make the right-hand side positive, $-dx$ must be taken. Separating the variables and integrating, we get

$$cA\sqrt{2g}\cdot\int_0^t dt = -F\int_{h_1}^{h_2}\frac{dx}{\sqrt{x}},$$

or

$$cA\sqrt{2g}\cdot t = 2F(\sqrt{h_1}-\sqrt{h_2}). \quad . \quad . \quad (4)$$

This equation gives the relationship between the quantities which enter into the problem, and from this equation one of the quantities may be determined if the rest are known. It will be seen that without the minus sign in Eq. (3) the result (4) would have no meaning, since $h_1 > h_2$, and the right-hand side would be negative.

The time of emptying the vessel is obtained by letting $h_2 = 0$. We have then*

$$t = \frac{2Fh_1}{cA\sqrt{2gh_1}}. \quad . \quad . \quad . \quad . \quad . \quad (5)$$

* It is convenient to preserve the expression $\sqrt{2gh}$ in hydraulic formulas, whenever possible, for two reasons: (1) it has a physical meaning, being a velocity, while $\sqrt{2g}$ has none; (2) tables have been published which give values of $\sqrt{2gh}$ for numerical values of h.

But $cA\sqrt{2gh_1}$ is the original rate of discharge, and Fh_1 is the capacity of the vessel. Hence, it actually takes twice as long to empty a vessel as it would to discharge the same amount of liquid from the orifice were the original head to be maintained. In other words the *average* velocity of discharge in emptying the vessel is equal to one half the *initial* velocity.

Prob. 1. — A cylindrical tank, 1.25 m. in diameter, is being emptied through a round opening in the bottom, 5 cm. in diameter. The original level of the liquid is 2.5 m. above the bottom. To levels of water in the tank as abscissæ plot as ordinates the time which it takes to reach these levels, and also the corresponding instantaneous rates of discharge in liters per second. Assume $c = 0.60$.

Ans. $h_2 = 2.5$ m., $q = 8.2$ l./sec., $t = 0$ secs.
$h_2 = 1.25$ m., $q = 5.84$ l./sec., $t = 217$ secs.
$h_2 = 0$ m., $q = 0$ l./sec., $t = 743$ secs.

Prob. 2. — Either curve required in Prob. 1 is a parabola, so that instead of calculating its ordinates point by point, it may be easier to find the vertex of the parabola and the parameter, and thus reduce it to the standard form $y^2 = 2px$. Show how this may be done, and check the results with the curves already obtained.

One of the important applications of the foregoing theory is the calculation of the time necessary for emptying a canal lock. When a ship canal is constructed through a hilly country, it is impossible to follow the profile of the route, on account of the resulting rapid flow of water. Therefore the canal is subdivided into sections separated by locks (Fig. 17). A lock consists of a chamber sufficiently large to accommodate a ship or a barge, and is provided with two gates A and B, with sluices or openings C and D. When it is desired to conduct a ship from the upper to the lower section of the canal, the ship being in position 1, sluice D is opened and the lock filled to the level of the upper sec-

tion of the canal. When the levels are equalized gate A is opened and the ship is admitted into the lock. Then gate A is closed and sluice C opened to empty the lock to the level of the lower section of the canal. When this is done gate B is opened and the ship is hauled

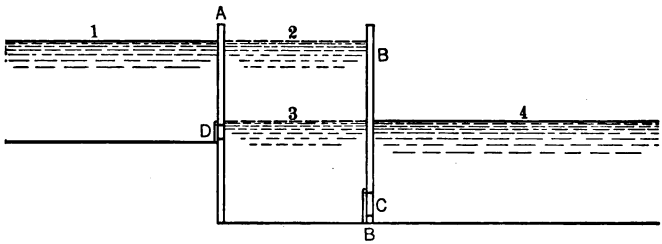

FIG. 17. — A canal lock.

out of the lock. In transferring the ship from the lower to the upper section of the canal the same operations are repeated in the reverse order. The time which it takes to transfer a ship is consumed mostly in filling and in emptying the lock. Therefore it is of great practical importance to know how to compute this time, in order to determine the capacity of the canal for traffic.

In applying the foregoing theory of discharge to the case of orifice C one must keep in mind that orifice C is a submerged opening, so that the hydraulic head acting upon particles of water in it is equal to the difference of the heads in the lock and in the lower section of the canal. It will be seen that this difference is equal to the difference of levels of water and does not depend upon the position of the orifice. For this reason, the theory is applicable to orifices of any size, and not only to small orifices, as in the case of discharge from the side of a vessel into the air.

Thus, formula (5) is directly applicable, provided that h_1 is understood to be the original difference of

levels of water, and provided that the lock is prismatic, that is, its walls are vertical. If the side walls are slanted, cross section F in Eq. (3) is a function of x, and this is to be taken into account in performing the integration. A lock with a variable cross section is considered in the following problem.

Prob. 3. — Find the time necessary to empty a lock chamber with side walls slanting at an angle θ from the vertical. The length of the lock is l; its width, when full, is b. The sluice is submerged and has an area A. The original difference of levels is h.

Solution. — Let the difference of levels at a time t be x, and let b_x equal the corresponding width of the free surface of water. Then according to formula (3),

$$cA\sqrt{2gx}\,dt = -lb_x\,dx,$$

where, according to the geometric shape of the lock,

$$b_x = b - 2(h - x)\tan\theta.$$

Separating the variables and integrating, we get

$$cA\sqrt{2g}\cdot t = -l\int_h^0 [b - 2(h-x)\tan\theta]/\sqrt{x}\cdot dx,$$

or

$$cA\sqrt{2g}\cdot t = 2l\sqrt{h}\{b - 2h + \tfrac{2}{3}h\tan\theta\},$$

whence

$$t = \frac{2lh\{b - 2h + \frac{2}{3}h\tan\theta\}}{cA\sqrt{2gh}}. \quad . \quad . \quad . \quad . \quad (6)$$

Prob. 4. — When the slant of the walls of a lock is small, or the walls are nearly vertical, it may be sufficiently accurate to use formula (5) instead of (6), taking for F the average area of the free surface of water between its highest and lowest positions. Deduce an expression for per cent error, as a function of the ratio b/h and of the angle θ, when formula (5) is used, instead of (6).

Ans. $100 \times \dfrac{2 - \frac{5}{3}\tan\theta}{(b/h) - 2 + \frac{2}{3}\tan\theta}$.

Prob. 5. — Represent per cent error deduced in the preceding problem by a series of curves for values of b/h from 20 to 2, and for values of batter from 1 : 20 to 1 : 1. Analyze and discuss the curves. *Note.* — A batter of 1 : 20 means that the surface of the

wall rises 20 feet for every foot of horizontal projection; in other words, $\tan\theta = 0.05$.

Prob. 6. — A vertical cylindrical vessel of horizontal cross section F is filled with a liquid to a level h_1. Two small holes of area m each are pierced simultaneously in its side, one at a height a, the other at a height b, above the bottom. Determine the time in which the level of the liquid will sink to a level h_2. Consider two cases: (A) $h_2 > b > a$, and (B) $b > h_2 > a$. Check the answer by applying it to some simple case, for example $a = b$.

Ans. (A) $$t = \frac{2F}{3(b-a)cm\sqrt{2g}}\{(h_1-a)^{\frac{3}{2}}-(h_2-a)^{\frac{3}{2}}-(h_1-b)^{\frac{3}{2}} + (h_2-b)^{\frac{3}{2}}\};$$

(B) $$t = \frac{2F}{3(b-a)cm\sqrt{2g}}\{(h_1-a)^{\frac{3}{2}}+2(b-a)^{\frac{3}{2}}-(h_1-b)^{\frac{3}{2}} - 3(b-a)(h_2-a)^{\frac{1}{2}}\}.$$

Prob. 7. — A swimming pool is 20 m. long and 9 m. wide. The depth of water varies uniformly from 100 cm. to 250 cm. What size opening must be made in the bottom of the deep end in order to empty the pool in 15 minutes? *Hint.* — For the upper 100 cm. use formula (4); for the rest integrate Eq. (3) in which F is variable and is determined from the proportion $F \div (20 \times 9) = x \div 150$.

Ans. 1150 sq. cm.

Prob. 8. — Show that when water is discharged from a hollow pyramid or a cone with the apex down, through a small orifice in the apex, the time of emptying is 20 per cent longer than the time which would be required to discharge the same volume at the initial head. *Hint.* — In formula (3) the variable cross section is determined from the proportion $F_x \div F_1 = x^2 \div h_1^2$.

Prob. 8a. — A water clock is an instrument which consists of a vessel with a small hole in the bottom. The liquid which fills the vessel is allowed to escape through this hole, and time is measured by the position of the free surface of the liquid. Show that, in order to have uniform divisions, the vessel must be so proportioned that areas of the surface of the liquid vary as square roots of the vertical distances to the orifice.

Prob. 9. — A reservoir has such a shape that the area F_x of horizontal cross sections varies according to the law $F_x = A + Bx + Cx^2$. Find the amount of time necessary to lower the level from h_1 to h_2 through an orifice of area A made in the bottom.

Ans. $$t = F[2A(\sqrt{h_1}-\sqrt{h_2})+\tfrac{2}{3}B(h_1^{\frac{3}{2}}-h_2^{\frac{3}{2}})+\tfrac{2}{5}C(h_1^{\frac{5}{2}}-h_2^{\frac{5}{2}})] /(cA\sqrt{2g}).$$

Prob. 10. — A spherical bowl of radius r is provided with a small opening of area A at the lowest point. Plot a curve showing the time necessary for emptying the bowl, as a function of the original level, from $x = 2r$ to $x = 0$. Take the time necessary to empty the semi-sphere as a unit.

Ans. $t = \pi\,(\frac{4}{3}rx^{\frac{3}{2}} - \frac{2}{5}x^{\frac{5}{2}})/(4\,cA\,\sqrt{2\,g})$; when $x = r$, $t = 1$, so that $A = 15/(14\,r^{\frac{5}{2}})$.

Prob. 11. — A bowl (Fig. 18) has the shape of an unknown surface of revolution; it seems probable from its form that it may have been generated by a parabolic curve. Find the time necessary for the level to fall from the height h_2 to a height h_1 when three cross

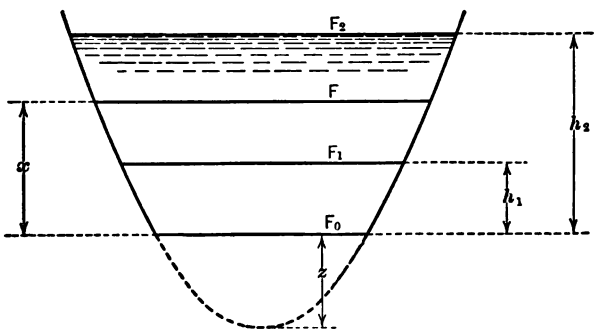

FIG. 18. — A bowl shaped like a surface of revolution generated by part of a parabolic curve.

sections F_0, F_1, and F_2 are given. *Solution.* — We assume that the surface is generated by a parabolic curve of some unknown degree, and that the vertex of the curve lies at a distance z from the bottom of the bowl. The areas of horizontal cross sections vary then as some unknown power of the distance $(z + x)$ from the vertex, and we have

$$z + x = (aF)^n. \quad . \quad . \quad . \quad . \quad . \quad . \quad . \quad (7)$$

This equation contains three unknown parameters, or determining constants of the surface, viz., z, a, and n. These three may be determined by applying Eq. (7) to the three given cross sections. We have

$$\left.\begin{aligned} z &= (aF_0)^n \\ z + h_1 &= (aF_1)^n \\ z + h_2 &= (aF_2)^n \end{aligned}\right\}. \quad . \quad . \quad . \quad . \quad . \quad . \quad . \quad (8)$$

Having determined the parameters of the surface by solving the three simultaneous Eqs. (8), we get from Eq. (7)

$$F = \frac{(z + x)^{1/n}}{a} \quad . \quad . \quad . \quad . \quad . \quad . \quad . \quad . \quad (9)$$

Substituting this value of F in Eq. (3) and integrating, the required time t is determined.

In actual application to numerical problems this method presents two difficulties: (*a*) Eqs. (8) can be solved by trial only; (*b*) Eq. (3), with the expression (9) for F in it, can be integrated in finite form only if n is an integer; such a case would be a rare chance. Even then the expression is rather complicated. If n is a fractional number, the integration has to be accomplished by Simpson's rule, or some such method. The procedure is illustrated in the next problem.

Prob. 12. — Apply the method explained in the preceding problem to the following data: $F_0 = 100$ sq. cm.; $F_1 = 155$ sq. cm.; $F_2 = 205$ sq. cm.; $h_1 = 10$ cm.; $h_2 = 26$ cm. The area of the orifice is 2.5 sq. cm. *Ans.* $t = 17.6$ sec.

Solution. — Subtracting the first of Eqs. (8) from the second gives

$$10 = (100\,a)^n\,(1.55^n - 1); \quad . \quad . \quad . \quad . \quad . \quad (10)$$

subtracting the first equation from the third, we get

$$26 = (100\,a)^n\,(2.05^n - 1).$$

Eliminating $(100\,a)^n$ from these equations by division gives an equation for n:

$$2.6 \times 1.55^n - 2.05^n = 1.6.$$

To solve this equation, plot a curve giving the value of the right-hand side of the equation for different values of n; the required value of n is that for which the ordinate of the curve is equal to 1.6. Knowing n, the parameter a is computed from Eq. (10), and finally z is determined from the first equation (8).

In order to integrate Eq. (3) using Simpson's rule (see Chapter II), the height of the vessel between the levels 0 and h_2 is divided into an even number of equal parts, say 10 or 12, and for each horizontal plane of division the value of

$$y = \frac{F}{\sqrt{x}} \quad . \quad . \quad . \quad . \quad . \quad . \quad . \quad . \quad . \quad (11)$$

is calculated, using the value of F according to expression (9). Then, if Δh is the distance between the planes of division, we have

$$V = \int_0^{h_2} \frac{F}{\sqrt{x}}\,dx = \frac{\Delta h}{3}\{y_0 + 4\,(y_1 + y_3 + y_5 + y_7 + y_9 + y_{11}) + 2\,(y_2 + y_4 + y_6 + y_8 + y_{10}) + y_{12}\}. \quad . \quad . \quad . \quad . \quad . \quad (12)$$

After integration, Eq. (3) becomes

$$cA\sqrt{2g}\cdot t = V, \quad . \quad . \quad . \quad . \quad . \quad . \quad . \quad . \quad . \quad (13)$$

from which expression the value of t can be calculated. The student is advised to perform these operations and to get the final numerical result.

Prob. 13. — Show how to calculate the time necessary for emptying a reservoir of entirely irregular form, or the time necessary for lowering the level of the liquid by a given amount. This problem has an application to storage reservoirs, such as are formed by constructing a dam across a valley, for irrigation or power purposes. *Hint.* — Use equations similar to (11), (12), and (13) in the preceding problem.

Communicating Vessels.

Two cylindrical vessels (Fig. 19) are connected by a short pipe of cross section A. The horizontal cross section of one vessel is F_1; that of the other is F_2. The

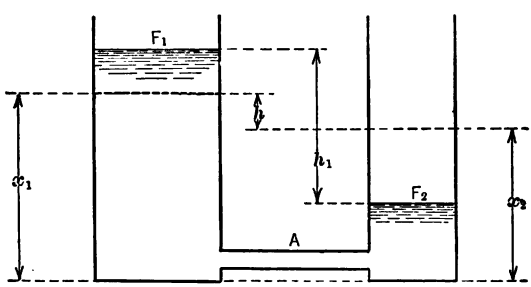

FIG. 19. — Two communicating vessels.

original difference of the levels of the fluid is h_1. It is required to calculate the length of time which it will take for the difference of levels to become h_2.

The orifice being submerged, the hydraulic head is

equal to the instantaneous difference h of the levels in the vessels, so that, according to Eq. (3),

$$cA\sqrt{2gh}\cdot dt = -F_1\,dx_1. \quad . \quad . \quad . \quad (14)$$

The water which flows out of the first vessel raises the level in the second vessel, so that there exists the relationship

$$-F_1\,dx_1 = F_2\,dx_2. \quad . \quad . \quad . \quad . \quad (15)$$

The minus sign is necessary in this equation because x_1 increases when x_2 decreases.

The variables x_1 and x_2 are also connected by the relation

$$x_1 - x_2 = h. \quad . \quad . \quad . \quad . \quad . \quad (16)$$

Eliminating x_1 and x_2 from these three equations, and integrating the result, the solution of the problem is obtained. We first differentiate Eq. (16) and eliminate dx_2 by means of Eq. (15). The result is

$$dx_1 = \frac{F_2}{F_1 + F_2}\cdot dh.$$

Substituting this expression in Eq. (14), we get

$$cA\sqrt{2gh}\cdot dt = -F\,dh, \quad . \quad . \quad . \quad (17)$$

where, for the sake of abbreviation,

$$F = \frac{F_1F_2}{F_1 + F_2}. \quad . \quad . \quad . \quad . \quad . \quad (18)$$

Eq. (18) is identical in form with Eq. (3), so that the result of integration is mathematically identical with Eq. (4), and we get

$$cA\sqrt{2g}\cdot t = 2F(\sqrt{h_1} - \sqrt{h_2}). \quad . \quad . \quad (19)$$

This equation may be solved for t, which is the time required for reducing the difference of the levels from h_1 to h_2.

Prob. 14. — Two rectangular tanks are given; the horizontal dimensions of one are 1.5 m. by 2.5 m., those of the other are 0.6 m. by 1 m. These tanks are connected by a pipe 5 cm. in diameter. The original difference of levels is 3 m. Plot a curve showing the time necessary to reach various differences of levels.

Ans. $h_2 = 2$ m.; $t =$ 63 secs.
$h_2 = 1$ m.; $t =$ 145 secs.
$h_2 = 0$ m.; $t =$ 343 secs.

Prob. 15. — What becomes of Eq. (18) when the area of one of the vessels is very large as compared to that of the other, as for instance in the case of a lock and a section of a canal considered above? *Hint.* — If F_2 is very large, divide the numerator and the denominator by F_2.

Prob. 16. — Extend the theory of communicating vessels to the case when the vessels are not cylindrical, F_1 being given as a function of x_1, and F_2 as a function of x_2. Apply the general method to the shapes of vessels given in Prob. 3, and in Probs. 7 to 12; also to various other shapes and their combinations. *Hint.* — Integrate Eq. (15) and eliminate x_2 from the result by means of Eq. (16). Integrate Eq. (14) with respect to x_1 instead of h.

Influx Simultaneous with Discharge.

There are cases in practice when fluid is continuously added to a vessel, and at the same time some of it is being discharged. Such is the case in a storage reservoir, out of which water is being drawn for power or for irrigation; and at the same time there is an influx of water from a river above. Let q be the constant amount of liquid added to reservoir I per unit of time (Fig. 20). Then Eq. (3) becomes:

$$(cA\sqrt{2gx} - q)\,dt = -F\,dx. \quad . \quad . \quad . \quad (20)$$

Since it makes no difference in what way the constant amount q is added, let us assume that it is being added from an infinitely large vessel II, through an identical orifice A, the level in reservoir II being maintained constant and equal to m. This level m is deter-

mined by the condition that the discharge be equal to q; or

$$cA\sqrt{2gm} = q. \quad . \quad . \quad . \quad . \quad . \quad (21)$$

Equation (20) becomes then

$$cA\sqrt{2g}\,(\sqrt{x} - \sqrt{m})\,dt = -F\,dx. \quad . \quad . \quad (22)$$

Comparing Eq. (22) with Eq. (20) it will be seen that Eq. (22) is more symmetrical, and therefore the solu-

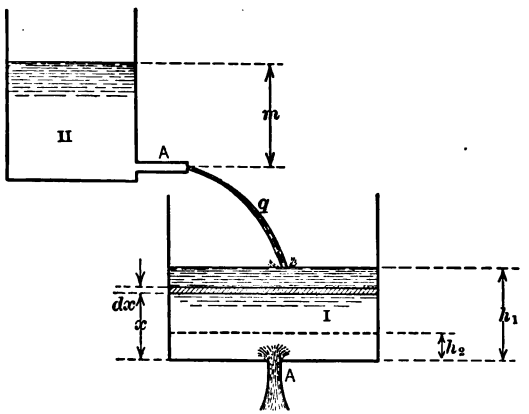

FIG. 20. — Influx simultaneous with discharge.

tion can be more readily interpreted and analyzed. This is the reason for introducing the head m instead of the discharge q.

If the horizontal area F of vessel I is constant, Eq. (22) may be integrated thus:

$$cA\sqrt{2g}\cdot t = F\int_{h_2}^{h_1}\frac{dx}{\sqrt{x} - \sqrt{m}}. \quad . \quad . \quad (23)$$

In order to integrate the right-hand side of this equation a new variable z is introduced:

$$z = \sqrt{x} - \sqrt{m},$$

so that

$$dz = \frac{dx}{2\sqrt{x}} = \frac{dx}{2(z + \sqrt{m})}.$$

Substituting, we get

$$\int_{h_2}^{h_1} \frac{dx}{\sqrt{x} - \sqrt{m}} = \int_{z_2}^{z_1} \frac{2(z + \sqrt{m})\,dz}{z} = \Big[2z + 2\sqrt{m}\log z\Big]_{z_2}^{z_1}$$

or, finally,

$$\int_{h_2}^{h_1} \frac{dx}{\sqrt{x} - \sqrt{m}} = 2(\sqrt{h_1} - \sqrt{h_2}) + 2\sqrt{m}\log\frac{\sqrt{h_1} - \sqrt{m}}{\sqrt{h_2} - \sqrt{m}}.$$

Thus, Eq. (23) becomes

$$cA\sqrt{2g}\cdot t = 2F\left[(\sqrt{h_1} - \sqrt{h_2}) + \sqrt{m}\log\frac{\sqrt{h_1} - \sqrt{m}}{\sqrt{h_2} - \sqrt{m}}\right]. \quad (24)$$

Comparing this expression with Eq. (4) it will be seen that the last logarithmic term represents the effect of the influx in lengthening the necessary time of discharge. If there is no influx, $m = 0$, and Eqs. (24) and (4) become identical.

Prob. 17. — Solve Prob. 1 when there is an influx of 5 liters per second. Can the tank be emptied, and if not what is the lowest level which the water can reach?

Ans. $h_2 = 2.5$ m.; $q = 8.2$ l./sec.; $t = 0$ sec.
$h_2 = 1.25$ m.; $q = 5.84$ l./sec.; $t = 798$ sec.
$h_2 = 0.92$ m.; $q = 5.0$ l./sec.; $t = \infty$ sec.

Prob. 18. — Investigate the value and the sign of t in Eq. (24) for $h_1 > h_2 > m$, $h_1 > m > h_2$, and $m > h_1 > h_2$.

Prob. 19. — Deduce an expression similar to (24) for the case of an inverted pyramid or cone with a small hole in the apex. Evaluate the *integral* for $m = 9$ cm., from $h_1 = 25$ cm. to $h_2 = 15$ cm. *Hint.* — See Prob. 8 above. *Ans.* 2758 (cm.)$^{2.5}$.

Large Orifices.

In the case of a large non-submerged orifice in the side of a vessel, the discharge of a fluid takes place under a different head at different parts of the orifice, so that Eq. (2) is applicable only to an infinitesimal horizontal strip of the orifice for which the head may be

considered constant. Thus, in the case of a rectangular orifice of width l, we have

$$dQ = cdA \cdot v = c \cdot l\, dh \sqrt{2gh}, \quad . \quad . \quad . \quad (25)$$

and the total discharge

$$Q = cl \sqrt{2g} \int_{k_1}^{k_2} \sqrt{h}\, dh,$$

where k_1 and k_2 are the distances from the free surface of the liquid to the upper and the lower edge of the orifice respectively. Integrating, we obtain

$$Q = \tfrac{2}{3} cl \left(k_2 \sqrt{2gk_2} - k_1 \sqrt{2gk_1}\right), \quad . \quad . \quad (26)$$

also sometimes written in the form

$$Q = \tfrac{2}{3} cl \sqrt{2g} \left(k_2^{\frac{3}{2}} - k_1^{\frac{3}{2}}\right). \quad . \quad . \quad . \quad (27)$$

Form (26) is perhaps more convenient for computations, because the values of $\sqrt{2gk}$ may be taken directly from available tables.

Prob. 20. — A rectangular tank 15 m. by 60 m. is filled with water to a level of 3.2 m. above the bottom. How long will it take to empty half of the tank through a rectangular orifice 0.5 m. wide and 0.2 m. high, the lower edge of the orifice being 0.1 m. above the bottom?

Solution. — By analogy with Eqs. (2) and (3), and using expression (26), we get for an infinitesimal element of time dt corresponding to a change dx in the level:

$$\begin{aligned} &\tfrac{2}{3} \times 0.6 \times 50 \left[(x + 20) \sqrt{2g(x + 20)} - x \sqrt{2gx}\right] dt \\ &\qquad = -1500 \times 6000\, dx, \end{aligned}$$

or, separating the variables, and integrating,

$$2.2t \times 10^{-6} = \frac{1}{\sqrt{2g}} \int_{130}^{290} \frac{dx}{(x + 20)\sqrt{(x + 20)} - x\sqrt{x}}.$$

The integral can be computed readily by using Simpson's rule.

Ans. $t = 376$ secs.

Prob. 21. — Deduce a formula corresponding to Eq. (26) for a triangular orifice (Fig. 21), the apex being downward. *Hint.* — In Eq. (25) l is a linear function of h.

Ans. $Q = \frac{4}{15} c \tan\theta \sqrt{2g}\,[2k_2^{\frac{5}{2}} - 5k_2k_1^{\frac{3}{2}} + 3k_1^{\frac{5}{2}}]$.

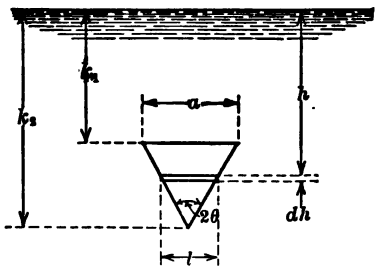

FIG. 21. — A large triangular orifice.

Prob. 22. — Deduce a formula corresponding to Eq. (26) for a parabolic orifice. See Fig. 22, in which $y = px^2$.

Ans. $Q = \frac{1}{4}\pi c \sqrt{2g}\, k_2^2 / \sqrt{p}$.

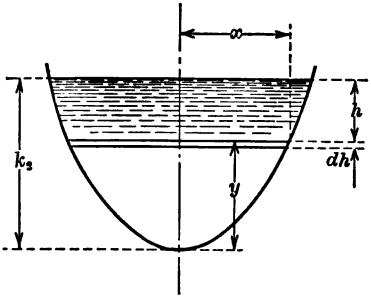

FIG. 22. — A parabolic orifice.

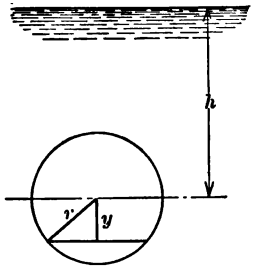

FIG. 23. — A round orifice.

Prob. 23. — Deduce a formula corresponding to Eq. (26) for a round orifice. *Solution.* — With the notation according to Fig. 23, we have

$$l = 2\sqrt{r^2 - y^2},$$

so that Eq. (25) becomes

$$dQ = 2c\sqrt{r^2 - y^2} \cdot \sqrt{2g(h + y)} \cdot dy. \quad . \quad . \quad . \quad (28)$$

This expression must be integrated from $y = -r$ to $y = +r$. Since it cannot be integrated in a finite form, two ways are open:

(1) If only a numerical result is desired, use Simpson's rule.

(2) If a general expression for Q is required, expand expression (28) into a convergent infinite series and integrate each term separately. Of course, the result is of use only if it also happens to be a convergent series.

In order to make expression (28) integrable we expand $\sqrt{h+y}$ according to the binomial theorem, so that

$$dQ = 2c\sqrt{2gh}\cdot\sqrt{r^2-y^2}\left\{1+\frac{1}{2}\frac{y}{h}-\frac{1}{8}\frac{y^2}{h^2}+\cdots\right\}dy.$$

We thus have, using a table of integrals:

$$\int_{-r}^{+r}\sqrt{r^2-y^2}\cdot dy = \tfrac{1}{2}\left[y\sqrt{r^2-y^2}+r^2\sin^{-1}(y/r)\right]_{-r}^{+r} = \tfrac{1}{2}\pi r^2;$$

$$\int_{-r}^{+r} y\sqrt{r^2-y^2}\,dy = -\tfrac{1}{3}\left[\sqrt{(r^2-y^2)^3}\right]_{-r}^{+r} = 0;$$

$$\int_{-r}^{+r} y^2\sqrt{r^2-y^2}\,dy = \left[-\frac{y}{4}\sqrt{r^2-y^2}+\frac{r^2}{8}\left(y\sqrt{r^2-y^2}+r^2\sin^{-1}\frac{y}{r}\right)\right]_{-r}^{+r} = \frac{\pi r^4}{8},$$

. . . . . .

. . . . . .

The first of the foregoing integrals represents the area of the half circle (left- or right-hand side of the orifice); the second integral represents its static moment, and the third integral its moment of inertia with respect to the horizontal axis passing through the center. Thus, in this case the results could have been written without actually performing the integration. It will also be seen that all the terms containing odd powers of y vanish in the result.

Thus, finally,

$$Q = 2c\sqrt{2gh}\left\{\frac{1}{2}\pi r^2-\frac{1}{8}\cdot\frac{\pi r^4}{8h^2}-\cdots\right\},$$

or

$$Q = c\sqrt{2gh}\cdot\pi r^2\left\{1-\frac{1}{32}\left(\frac{r}{h}\right)^2-\cdots\right\}. \quad . \quad . \quad . \quad (29)$$

Without the correction terms in the parentheses, the formula is identical with Eq. (2) for a small orifice.

Prob. 24. — Compute two more terms in Eq. (29).

Prob. 25. — The discharge through various large round orifices is to be computed using the approximate formula (2). Plot a curve giving per cent error in the result for different values of r/h.

Prob. 26. — The diameter of a round orifice is 1.4 m., the distance from the upper edge to the level of the water is 0.3 m. Compute the discharge, using Simpson's rule, and compare the result with that obtained from Eq. (29).

CHAPTER IV.

FORM OF LIQUID JET.

A JET of liquid AC (Fig. 24) is issuing through a horizontal nozzle A in the side of the vessel MN. The level of the liquid in the vessel is kept constant. The problem is to find the mathematical shape of the jet, knowing its initial velocity v.

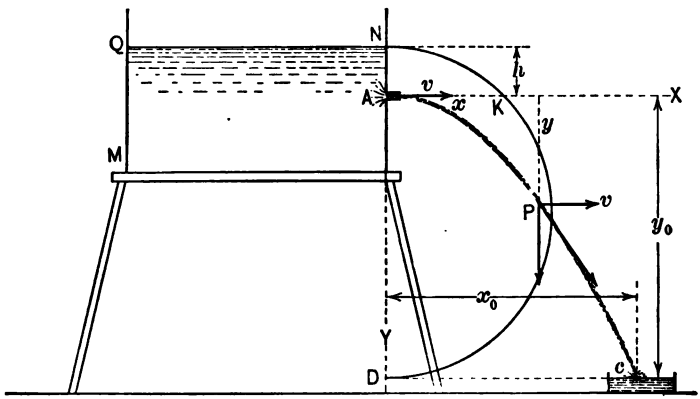

FIG. 24. — A jet issuing from a horizontal nozzle.

The motion of a particle of liquid, such as P, may be resolved into a uniform horizontal motion at the initial velocity due to inertia and into an accelerated motion downward under the action of gravity. If x and y are the coördinates of the point P, referred to point A as the origin, the foregoing components of the motion are expressed mathematically thus:

$$x = vt, \quad . \quad . \quad . \quad . \quad . \quad . \quad . \quad (1)$$

$$\frac{d^2y}{dt^2} = g, \quad . \quad . \quad . \quad . \quad . \quad . \quad . \quad (2)$$

where t is the time, counted from the moment at which the particle P issued from the nozzle, and g is the acceleration due to gravity.

Eliminating t from Eqs. (1) and (2) the required equation of the path is obtained. Before doing this, Eq. (2) must be integrated. The first integral is

$$\frac{dy}{dt} = gt + C_1,$$

where C_1 is the constant of integration, which is determined by the specific conditions of the problem. Namely, when $t = 0$, the vertical component dy/dt of the velocity is also zero, since the nozzle is horizontal. Hence $C_1 = 0$ and the first integral is

$$\frac{dy}{dt} = gt.$$

Integrating again, we get

$$y = \tfrac{1}{2}gt^2 + C_2.$$

When $t = 0$, the ordinate $y = 0$, so that $C_2 = 0$, and we finally have as the integral of Eq. (2)

$$y = \tfrac{1}{2}gt^2. \quad . \quad . \quad . \quad . \quad . \quad . \quad . \quad (3)$$

Eq. (3) is sometimes deduced in an elementary way as follows: The acceleration g being constant, and the initial velocity zero, the final velocity after an interval of time t is gt, because, by definition, acceleration is the rate of increase of velocity per unit of time. Thus, the *average* velocity during the period of time t is $\frac{1}{2}gt$, and hence the length of the path in the direction of g is $y = \frac{1}{2}gt \cdot t = \frac{1}{2}gt^2$. Relation (3) may also be considered as a direct result of experiments on bodies falling under the action of gravity.

Eliminating t from Eqs. (1) and (3) we obtain

$$y = \frac{g}{2\,v^2} \cdot x^2. \quad . \quad . \quad . \quad . \quad . \quad . \quad . \quad (4)$$

This is a parabola with its vertex in the origin.

Prob. 1. — Show that Eq. (4) is physically homogeneous. In other words show that the dimension of the right-hand member is that of a length which is also the dimension of y. *Solution.* —

$$y = \frac{\text{length}/(\text{time})^2}{(\text{length}/\text{time})^2}(\text{length})^2 = \text{length}.$$

Prob. 2. — A jet issues from the vessel MN (Fig. 24) at a velocity of 3 m. per sec. and is delivered into the vessel c, 1.25 m. below the nozzle. Plot the shape of the jet and determine the horizontal distance between the nozzle and vessel c. *Ans.* $x = 1.515$ m.

Prob. 3. — Show that when a discharge takes place under ideal conditions, that is, without friction or eddies in the nozzle, the directrix of the parabola lies in the free surface QN of the liquid. *Solution.* — When there are no frictional resistances to the flow of liquid, the total potential energy of a particle of mass m on the free surface is converted into kinetic energy as it issues from the nozzle. Thus, if h is the head, we may write: $(gm)\ h = \frac{1}{2}\ mv^2$, hence

$$v = \sqrt{2\,gh}. \quad . \quad . \quad . \quad . \quad . \quad . \quad . \quad . \quad . \quad (5)$$

Expression (5) is called Torricelli's theorem, and it may be considered as a well-established experimental fact. Substituting in Eq. (4) the value of v from Eq. (5), we obtain

$$x^2 = 4\,hy. \quad . \quad . \quad . \quad . \quad . \quad . \quad . \quad . \quad . \quad (6)$$

Comparing this with the standard form of the equation of a parabola, $x^2 = 2\,py$, and remembering that the distance between the vertex and the directrix is $\frac{1}{2}\,p$, the required relation is proved.

Prob. 4. — Prove that when Eq. (6) holds true, the range DC of the jet (Fig. 24) is equal to twice the abscissa AK of a semicircle described on ND as a diameter.

Prob. 5. — Prove on the basis of the result of Prob. 4 that to obtain a maximum range the nozzle A must be placed at such a distance h from the free surface as to divide ND in half; also that

the range is the same for any two positions of A equidistant from N and D.

Because of frictional resistances and of eddies, the actual velocity of discharge is lower than that determined from Eq. (5). Therefore, in practice, this equation is modified to

$$v = f\sqrt{2gh}, \quad . \quad . \quad . \quad . \quad . \quad . \quad (7)$$

where f is the so-called coefficient of velocity.* If, for instance, $f = 0.95$, the actual velocity is equal to 95 per cent of the theoretical velocity corresponding to the same head h. Five per cent of velocity is lost in friction and eddies in the nozzle. The value of f depends upon the shape and size of the orifice and of the nozzle, and on some other conditions of discharge. Introducing in Eq. (4) the value of v from Eq. (7), we get

$$x^2 = 4\,hy \cdot f^2, \quad . \quad . \quad . \quad . \quad . \quad (8)$$

so that the range x decreases with the coefficient f, and one is a direct measure of the other. This relationship provides a simple means for an experimental determination of f.

Prob. 6. — A horizontal jet (Fig. 25) issues from the nozzle A, the center of which is h_1 m. below the free surface; another jet issues from the nozzle B which is h_2 m. directly below the first. Find the coördinates of the point at which the two jets meet each other, assuming the coefficient of velocity of the two nozzles to be the same. *Ans.* $x_1 = \sqrt{4\,h_1 f_1^2 (h_1 + h_2)}$.

Prob. 7. — Solve Prob. 6 when the coefficients of velocity are different for the two jets. Can the coefficient of velocity of the lower jet be made so small that the jets will not intersect?

Ans. $x_1 = \sqrt{\dfrac{4\,h_1 h_2 f_1^2 f_2^2 (h_1 + h_2)}{f_2^2 (h_1 + h_2) - h_1 f_1^2}}$.

* This coefficient is different from the coefficient of discharge c, used in the preceding chapter.

Prob. 8. — The coördinates of the following points have been actually measured on a very thin jet (Fig. 24):

$y = 1$	2	3	meters.
$x = 2.77$	3.92	4.80	meters.

The head h equals 3 m. Determine the coefficient f of the nozzle. *Hint.* — Mark the given points on a sheet of logarithmic cross-section paper and draw the nearest straight line through them at a slope of 2 : 1. *Ans.* $f = 0.8$.

The foregoing theory may be generalized for the case when the axis of the nozzle is inclined at an angle α

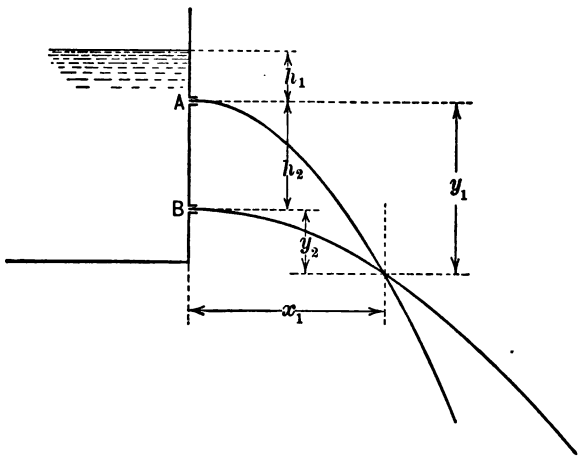

FIG. 25. — Two intersecting jets.

to the horizontal (Fig. 26). The horizontal projection of the initial velocity v is now $v \cos \alpha$, so that Eq. (1) becomes

$$x = v \cos \alpha \cdot t. \quad . \quad . \quad . \quad . \quad . \quad (9)$$

The vertical projection of the initial velocity is $-v \sin \alpha$, so that Eq. (3) becomes

$$y = \tfrac{1}{2} gt^2 - v \sin \alpha \cdot t. \quad . \quad . \quad . \quad . \quad (10)$$

This is because during the time t a particle not only falls under the action of gravity by the amount $\frac{1}{2} gt^2$,

but it is also carried by inertia upward on account of the vertical component $v \sin \alpha$ of the initial velocity v. Eliminating t from Eqs. (9) and (10) the following equation of the shape of the jet is obtained:

$$y = \frac{gx^2}{2\,v^2 \cos^2 \alpha} - x \tan \alpha. \qquad . \quad . \quad (11)$$

For a horizontal nozzle $\alpha = 0$ and Eq. (11) becomes identical with Eq. (4).

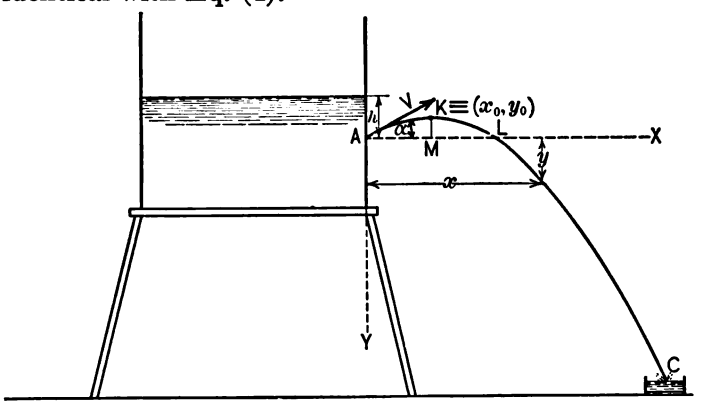

FIG. 26. — Jet with an inclined axis.

Introducing the value of v from Eq. (7), as before, Eq. (11) becomes

$$y = \frac{x^2}{4\,hf^2 \cos^2 \alpha} - x \tan \alpha. \quad . \quad . \quad . \quad (12)$$

Prob. 9.* — Eq. (12) represents a parabola; reduce its equation to the standard form $x^2 = 2\,py$. *Solution.* — Let x_0 and y_0 (Fig. 26) be the unknown coördinates of the vertex K of the parabola. The equation of the parabola is of the form

$$(x - x_0)^2 = 2\,p\,(y - y_0),$$

or

$$x^2 + x_0^2 - 2\,xx_0 = 2\,py - 2\,py_0.$$

* Most of the problems that follow apply also to the finding of trajectories and ranges of projectiles, except that the resistance of the air and other disturbing influences modify somewhat the path and the velocity of a projectile.

The parabola passes through the origin A, so that this equation must be satisfied when $x = 0$ and $y = 0$. Substituting these values we get the relation

$$x_0^2 = -2\,py_0, \quad . \quad . \quad . \quad . \quad . \quad . \quad . \quad . \quad (13)$$

so that the foregoing equation is simplified to

$$x^2 - 2\,xx_0 = 2\,py. \quad . \quad . \quad . \quad . \quad . \quad . \quad . \quad (14)$$

Comparing it term by term with Eq. (12) we find that

$$p = 2\,hf^2 \cos^2 \alpha, \quad . \quad . \quad . \quad . \quad . \quad . \quad . \quad . \quad (15)$$

$$x_0 = 2\,hf^2 \cos^2 \alpha \cdot \tan \alpha, \quad . \quad . \quad . \quad . \quad (16)$$

and using Eq. (13)

$$y_0 = -hf^2 \cos^2 \alpha \tan \alpha. \quad . \quad . \quad . \quad . \quad (17)$$

The coördinates x_0 and y_0 are expressed through the parameter $2\,p$ thus:

$$\left.\begin{aligned} x_0 &= p \tan \alpha \\ y_0 &= -\tfrac{1}{2}\,p \tan^2 \alpha \end{aligned}\right\} \quad . \quad . \quad . \quad . \quad . \quad . \quad . \quad (18)$$

Prob. 10. — A jet issues at an angle of 30 degrees to the horizontal and at a velocity of 15 m. per sec. Find the origin of the parabola and construct the curve using the value of its parameter $2\,p$. *Ans.* $x_0 = 9.93$ m.; $y_0 = -2.87$ m.

Prob. 11. — Find the value of x_0 directly from Eq. (12), as the point at which the height of the jet reaches its maximum. Check the value so found with that given by Eq. (16).

Prob. 12. — How would you find from Eq. (12) the horizontal distance at which a vessel C must be placed in order to receive the liquid? Explain the meaning of the double sign in the solution.

Prob. 13. — Find the position of the directrix of the parabola in Fig. 26. *Solution.* — The height of the directrix above the vertex is $\frac{1}{2}\,p$, so that from Eqs. (15) and (17) its height above the nozzle is $hf^2 \cos^2 \alpha \tan^2 \alpha + hf^2 \cos^2 \alpha = hf^2$. Hence the directrix always lies below the free surface of the liquid, and coincides with it in the ideal case of $f = 1.00$.

Prob. 14. — Find the value of angle α corresponding to the greatest possible horizontal range AL at the level of the orifice. *Solution.* — In Eq. (12) let $y = 0$; then, factoring out $x/\cos \alpha$, the result is $x/(4\,hf^2 \cos \alpha) = \sin \alpha$, or $x = 2\,hf^2 \sin 2\,\alpha$. The abscissa x is a maximum when $\sin 2\,\alpha = 1$; thus, $x_{\max} = 2\,hf^2$, when $\alpha = 45°$.

Prob. 15. — Water flows out of a vessel through an inclined nozzle, at a head h equal to 3 m. Two ordinates of the jet have been

measured: $y_1 = 0$ at $x_1 = 3$ m. and $y_2 = 3.5$ m. at $x_2 = 6$ m. From these data calculate angle α of the inclination of the nozzle, the coefficient of velocity f, and the highest point K which the jet reaches above the nozzle. *Ans.* $f = 0.758$; $\alpha = 30° 15'$.

Prob. 16. — Solve Probs. 6 and 7 when both nozzles are inclined at the same angle α.

$$Ans. \quad x_1 = 2f_1f_2 \cos\alpha \sqrt{\frac{h_1h_2(h_1 + h_2)}{f_2^2(h_1 + h_2) - f_1^2h_1}}.$$

Prob. 17. — Solve Probs. 6 and 7 when the angles α_1 and α_2 of inclination of the jets are different.

Prob. 18. — The following three points were obtained experimentally on a jet at $h = 3$ m.:

$x =$	2	4	6	m.
$y =$	-0.46	$+0.468$	$+2.884$	m.

Construct by trial a parabola which comes the nearest to these points, and from it determine the angle α of inclination of the nozzle and the velocity coefficient f. *Note.* — For a more accurate method based upon the method of least squares see Prob. 31 below.

Ans. $\alpha = 30°$; $f = 0.80$.

Prob. 19. — Find angle α at which a jet must issue from a fire hose at a given velocity in order to strike a given point. *Solution.* — Eq. (11) may be reduced to the form

$$a \sin 2\alpha + b \cos 2\alpha = k, \quad . \quad . \quad . \quad . \quad . \quad (19)$$

where a, b, and k are known quantities. This equation is solved by introducing an auxiliary angle ϕ such that

$$b/a = \tan\phi. \quad . \quad . \quad . \quad . \quad . \quad . \quad . \quad (20)$$

Substituting, Eq. (19) becomes $\sin 2\alpha + \tan\phi \cos 2\alpha = k/a$, or

$$\frac{\sin(2\alpha + \phi)}{\cos\phi} = \frac{k}{a}.$$

From this equation the unknown angle $(2\alpha + \phi)$ may be calculated and then α is determined, knowing ϕ from Eq. (20).

Prob. 20. — A jet issues from a vessel under the head $h = 3$ m. Find the angle of inclination of the nozzle, knowing that the jet strikes a point whose coördinates are $x = 2.5$ m. and $y = 1.35$ m. Coefficient of velocity $f = 0.90$.

Ans. $\alpha = 76° 27'$, or $\alpha = -14° 50'$.

Prob. 21. — A jet whose shape is represented by Eq. (12) strikes an inclined floor. Find angle α of the nozzle at which the range on

the floor is a maximum. The position of the floor is given by the following data: Its plane is perpendicular to that of the jet; it is b m. below the nozzle, and it rises at a slope of $1 : n$.

First Solution. — The equation of the trace of the floor in the plane of the jet is

$$y = b - \frac{x}{n}. \quad . \quad . \quad . \quad . \quad . \quad . \quad . \quad . \quad (21)$$

Combining this with Eq. (12) in order to find the point of intersection of the two curves, we get

$$b - \frac{x}{n} = \frac{x^2}{4\,hf^2 \cos^2 \alpha} - x \tan \alpha. \quad . \quad . \quad . \quad . \quad (22)$$

To find a maximum range this equation must be solved for x, and then α determined from the condition

$$\frac{dx}{d\alpha} = 0. \quad . \quad . \quad . \quad . \quad . \quad . \quad . \quad . \quad . \quad (23)$$

Second Solution. — The preceding solution leads to rather long formulæ; therefore, it is advisable to introduce condition (23) before solving Eq. (22) for x. Differentiate Eq. (22) with respect to α, considering x as a function of α:

$$-\frac{1}{n}\left(\frac{dx}{d\alpha}\right) = \frac{2\,x\,(dx/d\alpha)}{4\,hf^2 \cos^2 \alpha} + \frac{2\,x^2 \sin \alpha}{4\,hf^2 \cos^3 \alpha} - \tan \alpha \left(\frac{dx}{d\alpha}\right) - \frac{x}{\cos^2 \alpha}.$$

In view of condition (23), this equation is simplified to

$$\frac{2\,x^2 \sin \alpha}{4\,hf^2 \cos^3 \alpha} = \frac{x}{\cos^2 \alpha},$$

or

$$x \tan \alpha = 2\,hf^2. \quad . \quad . \quad . \quad . \quad . \quad . \quad . \quad (24)$$

Solving this equation with Eq. (22) as two simultaneous equations, the required values of x and α are obtained. The ordinate y is then determined from Eq. (21).

Ans. $2 + b/(hf^2) = 2/(n \tan \alpha) + 1/\sin^2 \alpha$.

Prob. 22. — A jet A (Fig. 27) is used for watering a garden situated on a slope inclined to the horizon at an angle β. Find the angle α at which the jet must be held in order to reach the furthest possible point B. The jet is supposed to issue directly from the ground, at a given velocity v. *Solution.* — The equation of the straight line AB is

$$y = -x \tan \beta. \quad . \quad . \quad . \quad . \quad . \quad . \quad . \quad (25)$$

Solving it with Eq. (11) in order to find the point of intersection B, we find

$$x = \frac{2\,v^2 \cos\alpha}{g \cos\beta} \sin(\alpha - \beta).$$

The maximum range is found from the condition

$$\frac{dx}{d\alpha} = \frac{2\,v^2}{g \cos\beta} \left\{ \cos(\alpha - \beta) \cos\alpha - \sin\alpha \sin(\alpha - \beta) \right\} = 0,$$

or $\cos(2\,\alpha - \beta) = 0$. Hence, $2\,\alpha - \beta = 90°$, or

$$\alpha = \tfrac{1}{2}\beta + 45°. \quad . \quad . \quad . \quad . \quad . \quad . \quad . \quad . \quad (26)$$

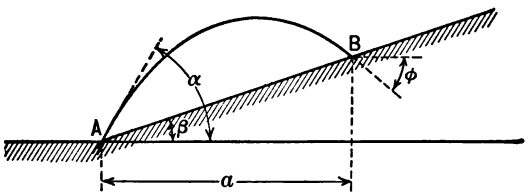

FIG. 27. — A jet which strikes an inclined plane.

Prob. 23. — At what angle α and at what velocity v must the jet be issued (Fig. 27) in order to strike a given point B at a given angle ϕ to the horizon? *Solution.* — Let a be the horizontal distance between A and B. We have from Eq. (11)

$$\left(\frac{dy}{dx}\right)_{x=a} = \left[\frac{gx}{v^2 \cos^2\alpha} - \tan\alpha\right]_{x=a} = \tan\phi,$$

or

$$\frac{ga}{v^2 \cos^2\alpha} - \tan\alpha = \tan\phi. \quad . \quad . \quad . \quad . \quad . \quad (27)$$

Applying Eq. (11) to point B gives

$$a \tan\beta = \frac{ga^2}{2\,v^2 \cos^2\alpha} - a \tan\alpha,$$

or

$$\frac{ga}{v^2 \cos^2\alpha} - 2 \tan\alpha = 2 \tan\beta. \quad . \quad . \quad . \quad . \quad (28)$$

Subtracting Eq. (28) from Eq. (27), $\tan\alpha$ is determined thus:

$$\tan\alpha = \tan\phi - 2 \tan\beta.$$

Prob. 24. — A fountain jet issues through a nozzle (Fig. 28) provided with small openings at the end, which throw water in all directions. Find the equation of the surface *enveloping* all the individual jets.

First Solution. — Since the required surface is a surface of revolution with a vertical axis, it is sufficient to consider the curve of its

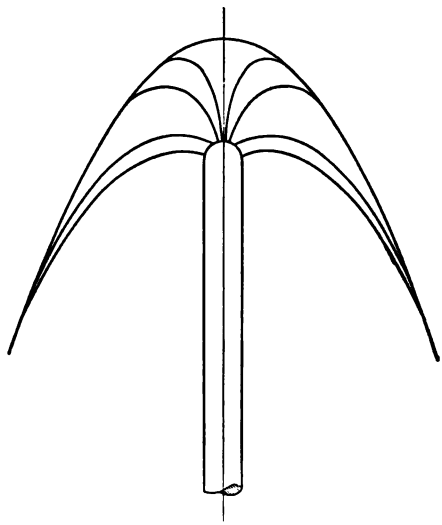

FIG. 28. — A vertical nozzle with small holes at the end.

intersection with the plane of the paper. Individual jets are represented by Eq. (12), angle α being different for each jet. It will be seen from the figure that the enveloping curve touches each jet at the point of its maximum range (Prob. 23). Hence, relation (24) holds true for each point common to a jet and to the envelope. Therefore, eliminating α from Eqs. (12) and (24), we obtain a general relationship between the coördinates of all the points of tangency, in other words, the equation of the envelope. We have from Eq. (24)

$$\frac{1}{\cos^2 \alpha} = 1 + \tan^2 \alpha = 1 + \frac{4\, h^2 f^4}{x^2},$$

and substituting this value into Eq. (12), we get, after reduction,

$$x^2 = 4\, hf^2 (y + hf^2), \quad . \quad . \quad . \quad . \quad . \quad . \quad (29)$$

which is a parabola. Hence, the required surface is a paraboloid of revolution.

Second Solution. — According to the general rule for finding an envelope, let

$$f(x, y, \alpha) = 0 \quad . \quad . \quad . \quad . \quad . \quad . \quad . \quad . \quad (30)$$

be the general expression for a family of curves (in our case, all the jets in one plane), where α is the variable parameter which distinguishes each curve; in our case it is an angle. The equation of the envelope is obtained by eliminating α from Eq. (30) and from the derivative equation

$$\frac{\partial f(x, y, \alpha)}{\partial \alpha} = 0. \quad . \quad . \quad . \quad . \quad . \quad . \quad . \quad . \quad (31)$$

In our case Eq. (30) corresponds to Eq. (12), and its partial derivative with respect to α is Eq. (24). Thus, we have the same solution as before.

Prob. 25. — Show that the enveloping parabola, Eq. (29), has its vertex in the plane of the "effective" level of the liquid in the supply tank, and that the focus of the parabola coincides with the center of the hemispherical end of the nozzle. *Note.* — The effective level corresponds to the head hf^2 which would be maintained for the same velocity of the jet, if the discharge were ideal, without friction.

Prob. 26. — Using the data of Prob. 10, plot a curve the ordinates of which will give values of velocity at different points of the jet. Also plot another curve the ordinates of which will give values of the trigonometric tangent of the angle which the jet makes with the horizontal at those points. Plot these curves to the same abscissæ as the jet itself. *Hint.* — Velocity $= \sqrt{(dx/dt)^2 + (dy/dt)^2}$; use Eqs. (9) and (10), and eliminate t.

Ans. $v = \sqrt{225 - 11.33x + 0.57x^2}$; $dy/dx = (0.755x - 7.5)/13$.

Prob. 27. — Show that in the preceding problem the curve of tangents is a straight line, and the curve of velocities is a hyperbola the vertex of which is on the abscissa at which the jet reaches its highest point.

Prob. 28. — Find the length of the jet, along the curve, expressed by Eq. (12), from the nozzle to the highest point.

Ans. $s = hf^2\{\sin\alpha + \cos^2\alpha \log_e(1+\sin\alpha) - \cos^2\alpha \log_e(1-\sin\alpha)\}$.

Prob. 29. — Find the angle of inclination of the nozzle such that the area included between the jet and the horizontal line through the nozzle will be a maximum.

First Solution. — Referring to Fig. 26, area AKL must be a maximum. For a parabola this area is equal to $\frac{2}{3}$ of the area of the circumscribed rectangle, so that the product $x_0 y_0$ must be a maximum. Therefore, according to Eqs. (16) and (17), the product $\cos^4 \alpha \tan^3 \alpha$ must be a maximum, or

$$\cos \alpha \sin^3 \alpha = \text{max.} \quad . \quad . \quad . \quad . \quad . \quad . \quad . \quad (32)$$

Taking a derivative and equating it to zero we find that $\sin \alpha = \frac{1}{2}\sqrt{3}$, or $\alpha = 60°$.

Second Solution. — Integrating Eq. (12) directly, we find that the area AKM is

$$A = \int_0^{x_0} y\, dx = \frac{x_0^3}{12\, hf^2 \cos^2 \alpha} - \frac{x_0^2}{2} \tan \alpha.$$

Substituting the value of x_0 from Eq. (16) gives A = Const. $\times \cos \alpha \sin^3 \alpha$, so that the result is identical with that obtained from Eq. (32).

Prob. 30. — Solve Prob. 8 using the method of least squares. *Solution.* — Let the unknown (most probable) parameter of the parabola be $2\,p$, and let some approximate value of it be $2\,P$. This value may be obtained by a rough trial and substitution into one or two sets of the experimental data. Let ρ be the unknown correction, so that

$$2\,p = 2\,P + \rho, \quad . \quad . \quad . \quad . \quad . \quad . \quad . \quad . \quad (33)$$

and the equation of the most probable parabola becomes

$$x'^2 = (2\,P + \rho)\, y'. \quad . \quad . \quad . \quad . \quad . \quad . \quad . \quad (34)$$

The sign " prime " means that x and y in this equation are not the actually observed values, but the most probable values. Since the observed points presumably do not lie exactly on this parabola, we have

$$x^2 - (2\,P + \rho)\, y = \text{error},$$

where x and y refer now to the actual experimental data. For the most probable parabola the sum of the squares of these errors must be a minimum, or

$$\Sigma\, [x^2 - (2\,P + \rho)\, y]^2 = \text{min.}$$

While a long detailed discussion of this proposition would be out of place here, the student can readily see that the condition

$$\Sigma \text{ errors} = \text{min.}$$

would not give the most probable curve. The individual errors may be very large, but some positive errors may cancel negative

errors making the sum quite small. On the other hand, the condition

$$\Sigma\,(\text{error})^2 = \text{min.}$$

necessitates that the individual errors be small because all the terms in the summation are positive.*

To find a minimum of the preceding expression, we equate to zero its derivative with respect to ρ, and obtain

$$\Sigma y\,[x^2 - (2\,P + \rho)\,y] = 0,$$

or

$$\Sigma y\,(x^2 - 2\,Py) = \rho\Sigma y^2,$$

from which

$$\rho = \frac{\Sigma y\,(x^2 - 2\,Py)}{\Sigma y^2} \quad . \quad . \quad . \quad . \quad . \quad . \quad . \quad (35)$$

Since $2\,P$ is known, small corrections

$$\eta^2 = x^2 - 2\,Py \quad . \quad . \quad . \quad . \quad . \quad . \quad . \quad . \quad (36)$$

for the experimentally observed points can be calculated, and then ρ computed from the formula

$$\rho = \frac{\Sigma y\eta^2}{\Sigma y^2}. \quad . \quad . \quad . \quad . \quad . \quad . \quad . \quad . \quad (37)$$

The student is advised actually to perform these computations, and to check the answer to Prob. 8, because only in this way can he fully appreciate the advantages of the method of least squares.

Prob. 31. — Solve Prob. 18 using the method of least squares. *Solution.* — According to Eq. (14), the most probable parabola is determined by the parameter $2\,p$ and the abscissa x_0 of the vertex. Let $2\,P$ and X_0 be approximate values of these quantities determined by trial, and let ρ and ξ be the unknown corrections. Then the most probable values are

$$\left.\begin{aligned} 2\,p &= 2\,P + \rho \\ x_0 &= X_0 + \xi \end{aligned}\right\}, \quad . \quad . \quad . \quad . \quad . \quad . \quad . \quad . \quad (38)$$

and Eq. (14) becomes

$$x'^2 - 2\,x'\,(X + \xi) = (2\,P + \rho)\,y',$$

where x' and y' are the coördinates of the most probable parabola. If, however, instead of these, we substitute the coördinates x and y

* See also the last portion of Chapter III, in the part on "Thermodynamics."

from the observed curve, the equation ceases to be satisfied, and we have

$$\text{error} = x^2 - 2x(X + \xi) - (2P + \rho)y.$$

For the most probable values of ξ and ρ the condition must be satisfied that

$$\Sigma(\text{error})^2 = \Sigma[x^2 - 2x(X + \xi) - (2P + \rho)y]^2 = \text{min.}$$

Taking partial derivatives with respect to ξ and ρ, and equating them to zero, we obtain the following two equations:

$$\Sigma x[x^2 - 2x(X + \xi) - (2P + \rho)y] = 0;$$
$$\Sigma y[x^2 - 2x(X + \xi) - (2P + \rho)y] = 0;$$

or

$$2\xi\Sigma x^2 + \rho\Sigma xy = \Sigma x(x^2 - 2xX - 2Py);$$
$$2\xi\Sigma xy + \rho\Sigma y^2 = \Sigma y(x^2 - 2xX - 2Py).$$

In these expressions we denote the discrepancies by η^2, as in the preceding problem, so that for any experimental point $\eta^2 = x^2 - 2xX - 2Py$, where η^2 is a small quantity. Solving the two preceding equations as simultaneous equations for ρ and ξ, we obtain

$$\left.\begin{aligned} \rho &= \frac{\Sigma x^2 \cdot \Sigma y\eta^2 - \Sigma xy \cdot \Sigma x\eta^2}{\Sigma x^2 \Sigma y^2 - (\Sigma xy)^2} \\ \xi &= \tfrac{1}{2}\frac{\Sigma y^2 \cdot \Sigma x\eta^2 - \Sigma xy \cdot \Sigma y\eta^2}{\Sigma x^2 \Sigma y^2 - (\Sigma xy)^2} \end{aligned}\right\} \quad . \quad . \quad . \quad . \quad . \quad (39)$$

Having determined ρ and ξ, the quantities $2p$ and x_0 become known from Eqs. (38). Finally, angle α and coefficient f may be calculated from Eqs. (15) and (16). The student is advised to perform these computations in order to become familiar with the method of least squares. He will probably find that the accuracy of an ordinary slide-rule is not sufficient for such computations, and that either a more accurate computing device or a table of logarithms must be used.

CHAPTER V.

PROBLEMS ON WATER SUPPLY.

THE usual method of supplying water to cities consists in pumping it from an available source, such as a river or springs, to an elevated reservoir. From the reservoir the water is fed through pipes by gravity to various parts of the city. The level of the water in the reservoir must be high enough to supply the necessary pressure at the highest points in the distributing pipes, and also to overcome a considerable loss of pressure in the pipes themselves, due to frictional resistance. Therefore, in the solution of problems involving diameters of pipes it is necessary to know in what way the loss of pressure depends upon the diameter of a pipe and upon the average velocity of water. The fundamental formula for the loss of pressure per

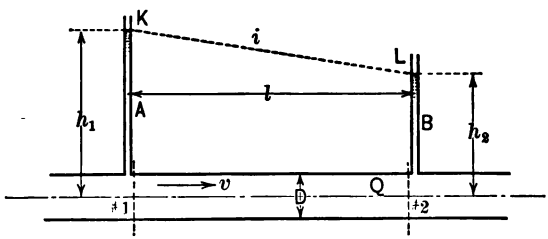

FIG. 29. — Fall of pressure along a pipe.

unit length of a pipe will be found in almost any standard text-book on hydraulics, but for the convenience of the student it is deduced below.

Let AB (Fig. 29) be a portion of a pipe of length l and diameter D, and let water flow through this pipe

at a rate of Q cubic units per second. The free pressure of water at different points along the pipe may be ascertained by inserting small vertical tubes, called piezometers, shown at A and B. When the water in the pipe is at rest, the level of water in these small pressure columns rises to that in the supply tank. When the water in the main pipe is in motion these levels sink, on account of loss of pressure due to frictional resistance in the pipe between the tank and the section of the pipe under consideration. Thus the difference of the levels at A and at B is due to the frictional resistance along AB.

The pressure of the water on cross section No. 1 of the pipe is $\frac{1}{4}\pi D^2 h_1 w$, where w is the weight of a cubic unit of water. Similarly, the pressure on cross section No. 2 is $\frac{1}{4}\pi D^2 h_2 w$, so that the net force moving the volume of liquid between A and B is $\frac{1}{4}\pi D^2 w (h_1 - h_2)$.

Since the motion of the water is uniform, this force is balanced by the force of friction between the pipe and the water. This friction may be expressed as $f \cdot \pi Dl$, where f is the force of friction per unit area, and πDl is the inner surface of the pipe. Thus we have

$$\tfrac{1}{4}\pi D^2 w (h_1 - h_2) = f \cdot \pi Dl. \quad . \quad . \quad . \quad (1)$$

Friction f is found by experiment to be approximately proportional to the square of the velocity of the liquid, or

$$f = av^2, \quad . \quad . \quad . \quad . \quad . \quad . \quad . \quad . \quad (2)$$

where a is an experimental coefficient. But the average velocity v and the discharge Q through the pipe are related as follows:

$$v = \frac{Q}{\frac{1}{4}\pi D^2},$$

so that

$$f = \frac{16\,aQ^2}{\pi^2 D^4}. \quad . \quad . \quad . \quad . \quad . \quad (3)$$

Substituting this value of f in Eq. (1) and combining all the constants, we obtain the following formula for the loss in pressure in terms of the difference in the levels of the piezometer tubes:

$$h_1 - h_2 = clQ^2/D^5,$$

where c is an empirical coefficient.

In practice, it is often convenient to know the loss in pressure per unit length of a pipe. Dividing both sides of the preceding equation by l we get

$$i = (h_1 - h_2)/l = cQ^2/D^5. \quad . \quad . \quad . \quad (4)$$

In this formula i is known as the *hydraulic gradient.* In Fig. 29, i is equal to the trigonometric tangent of the angle which KL makes with the horizontal.

The coefficient c is not constant even for a given quality or roughness of the inner surface of the pipe, but depends somewhat upon the diameter of the pipe and also upon the velocity of the water. For our purposes c will be assumed constant and equal to 23.6, when Q is expressed in liters per second and D in centimeters. The gradient i is a numeric, but both the loss of head $(h_1 - h_2)$ and the length of pipe l must be expressed in the same units, for instance in meters.

There are various tables in existence which give more accurate values for i than does formula (4); however, in order to treat certain problems mathematically, the value of i must be expressed through a formula. Then, after the solution has been found, it may be corrected by using a more accurate value of the constant c, taken

from a table, to correspond to the required diameter of the pipe and to the actual velocity of flow (see also Prob. 4 below).

Prob. 1. — What is the loss of pressure in a 10 cm. pipe 2.5 kilometers long, for rates of discharge varying from zero to 30 liters per second; plot a curve. *Ans.* $h_1 - h_2 = 59\,Q^2$ cm.

Prob. 2. — It is desired to represent the loss of head, according to formula (4), in the form of a chart of curves from which the loss of head per 100 m. of length of pipe could be read off directly for pipes ranging from 5 to 15 cm. in diameter in steps of one centimeter, and for rates of discharge such that the velocity of flow would be between 0.5 and 2 m. per sec. What is the best way to arrange such a chart? Calculate a few points, and show the general character and the limits of the curves.

Prob. 3. — The relationship between i, Q, and D in Eq. (4) corresponds to a surface, if i, Q, and D be plotted along three axes of coördinates in space. Describe as accurately as possible, both in mathematical and in physical terms, the general character of the surface. Illustrate the description by free-hand sketches, showing a few cross sections of the surface.

Prob. 4. — A formula for the hydraulic gradient, more accurate than formula (4), is

$$i = \frac{kQ^m}{D^n}, \quad . \quad . \quad . \quad . \quad . \quad . \quad . \quad . \quad . \quad (5)$$

where k is a numerical coefficient, and m and n are exponents somewhat different from 2 and 5. Determine the values of k, m, and n from the results of the experiments given in Fig. 30. *Hint.* —

$$\log i = \log k + m \log Q - n \log D. \quad . \quad . \quad . \quad . \quad (6)$$

The experimental curves being replotted to a logarithmic scale give a series of approximately parallel straight lines. The tangent of the angle of inclination of these lines with respect to the Q axis gives m, while n may be computed from the horizontal distance between the lines. *Ans.* $k = 22$; $m = 2.5$; $n = 4.8$.

Prob. 5. — Solve Prob. 4 using the method of least squares. *Solution.* — The method is explained in Probs. 30 and 31 at the end of Chapter IV. For the sake of uniformity it is convenient to represent formula (5) in the form $i = 10^r Q^m/D^n$, because it can then be

reduced to $r + m \log Q - n \log D = \log i$, with r, m, and n as unknown quantities. Let M, N, and R be some approximate values of m, n, and r, determined by trial, and let the most probable or the *best* values be

$$m = M + \mu,$$
$$n = N + \nu,$$
$$r = R + \rho,$$

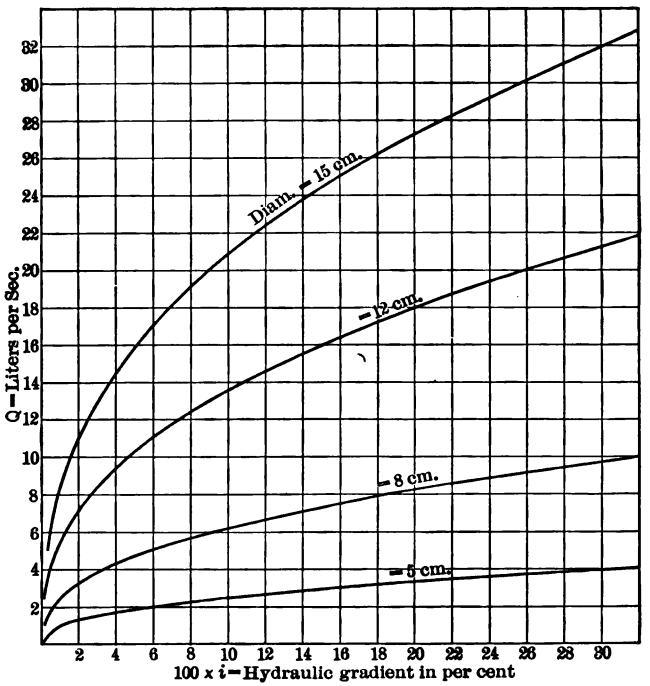

FIG. 30. — Experimental curves of loss of pressure in certain pipes.

where μ, ν, and ρ are unknown small corrections. Hence, we obtain $\rho + \mu \log Q - \nu \log D = \eta$, where η is a known quantity. The condition for the most probable values is

$$\Sigma(\rho + \mu \log Q - \nu \log D - \eta)^2 = \text{min.},$$

and the problem is reduced to the solution of three linear simultaneous equations. *Note.* — A seemingly shorter way is not to find

any approximate values, M, N, and R, but to apply the condition of least squares to the exponents r, m, and n directly. In this case

$$\text{error} = r + m \log Q - n \log D - \log i,$$

and

$$\Sigma\,(\text{error})^2 = \Sigma\,(r + m \log Q - n \log D - \log i)^2 = \text{min.}$$

The three partial derivatives of this expression, equated to zero, furnish three simultaneous equations for the unknown exponents. A serious disadvantage of such a procedure is that it leads to very large numbers with several significant places, which must be carefully computed in order to obtain a result that is at all accurate. This is because the result depends upon differences of large expressions almost equal to each other, so that the last significant figures really determine the result. On the contrary, with the method outlined before, the simultaneous equations are applied only to small corrections of the quantities already known, so that a considerable error in the computations affects the final result but little. A thoughtful student will derive considerable benefit from solving the problem both ways.

Formula (4) applies to the simplest case when the discharge Q is constant along the pipe. It is not applicable directly to a street main, from which water is taken by house pipes, because the discharge is variable

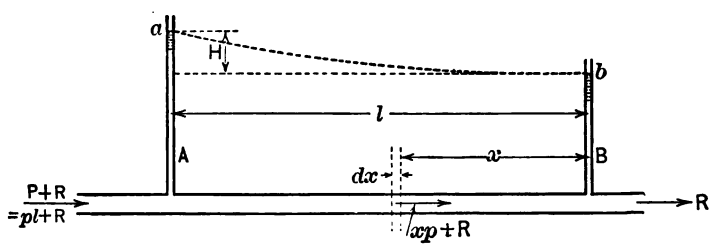

FIG. 31. — Loss of head in a pipe with a continuous uniform loss of discharge along its length.

along such a main. While water is taken at a finite number of points, it is mathematically simpler to assume the loss of discharge to be continuous along the main. In this case formula (4) may be applied to an infinitesimal length dx of the pipe (Fig. 31), and the

result integrated over the desired length of the pipe. Branch pipes to individual houses occur in practice at somewhat irregular intervals, and the demand for water is never the same or simultaneous from house to house. However, to simplify the conditions, the greatest demand for water is assumed to be continuous, and this demand is assumed to be uniformly distributed along the street main as if it were provided with a narrow longitudinal slot through which a uniform leakage occurs.

Let this side-demand be p liters per second per linear meter of the street. Let the pipe also carry an additional quantity R of water, which is fed at the end of the pipe into the next street main.

The quantity of water carried by the pipe at a distance x from the end is

$$Q_x = R + xp. \quad . \quad . \quad . \quad . \quad . \quad (7)$$

Substituting this value in formula (4) we get for the drop dH of pressure along the element dx

$$dH = i\,dx = c\,(R + xp)^2\,dx/D^5. \quad . \quad . \quad (8)$$

Integrating this expression over the total length of the main we find

$$H = c\int_0^l (R + xp)^2\,dx/D^5 = c(lR^2 + l^2Rp + \tfrac{1}{3}\,l^3p^2)/D^5.$$

Let the total demand along AB be denoted by P, so that $P = pl$; the above expression reduces to

$$H = cl\,(R^2 + RP + \tfrac{1}{3}\,P^2)/D^5, \quad . \quad . \quad . \quad (9)$$

which gives the required relation between the loss of pressure H, the diameter D of the pipe, and the discharges R and P.

Prob. 6. — A 30 cm. main 2 km. long must supply 70 liters per second to the street as a whole. How much may it discharge into the next street main provided that the total drop in pressure should not exceed 2 kg. per sq. cm.? *Ans.* 64.3 l./sec.

Prob. 7. — Show that when $R = 0$ the loss of head is one third of what it would be if P were concentrated at B instead of being uniformly distributed along AB.

Prob. 8. — Deduce the equation of the curve ab of hydraulic gradient (Fig. 31). Select the axes of coördinates so as to reduce the curve to its simplest form. *Hint.* — Integrate Eq. (8) between 0 and x; the curve is a cubic parabola.

Ans. $y = (p^3x^3 - R^3)/3p$.

Prob. 9. — Deduce an equation analogous to Eq. (9) when the distributed demand is on part l_2 of the pipe only (Fig. 32). Check

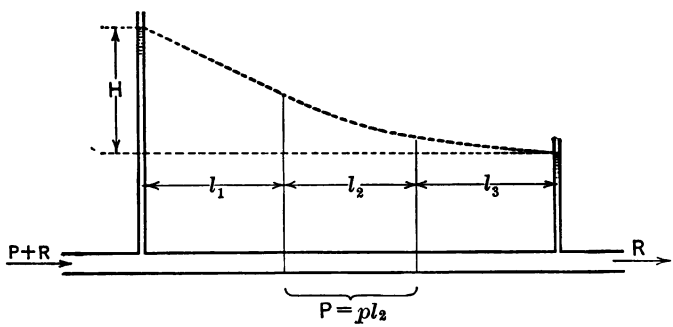

FIG. 32. — Loss of pressure in a pipe with a uniform demand over part l_2 of its length.

the answer for the cases previously considered when $l_2 = 0$, and when $l_1 = l_3 = 0$.

Ans. $H = \frac{c}{D^5}\left\{\frac{P^2(2l_1^2 + l_2^2)}{3l_2} + PR(2l_1 + l_2) + P^2 l_1 + R^2(l_1 + l_2 + l_3)\right\}$.

Prob. 10. — Eq. (9) becomes identical with Eq. (4) if an *equivalent* demand Q is introduced, such that $Q^2 = R^2 + PR + \frac{1}{3}P^2$. Show that

$$R + \frac{P}{\sqrt{3}} > Q > R + \tfrac{1}{2}P,$$

so that the usual assumption $Q = R + 0.55\,P$ is justifiable in practice.

Prob. 11. — The character of a street is such that the demand p per unit length cannot be assumed constant. This demand is equal to p_0 per unit length at A and is equal to p_1 at B; p may be assumed to vary according to the straight-line law between these points. How is formula (9) modified?

Ans. $H = \frac{cl}{D^5}\left(R^2 + \frac{Rp_1l}{3} + \frac{2\,Rp_0l}{3} + \frac{p_1^2l^2}{20} + \frac{3\,p_0p_1l^2}{20} + \frac{2\,p_0^2l^2}{15}\right).$

Prob. 12. — Modify and integrate Eq. (8) using for hydraulic gradient, expression (5) instead of Eq. (4). Consider only the simpler case when $R = 0$.

Ans. $H = kp^m x^{m+1}/(mD^n)$.

Prob. 13. — Solve Prob. 12 when R is not equal to zero. *Hint.* — In integrating introduce a new variable $z = R + xp$.

Ans. $H = [K(R + px)^{m+1} - KR^{m+1}]/(mpD^n)$.

Problems Involving Two Reservoirs.

In some cases of water supply more than one storage reservoir is provided, and these reservoirs may have to be maintained at different levels; for instance, one may be the main reservoir and the others auxiliary to it. Referring to Fig. 33, let A be the main reservoir which

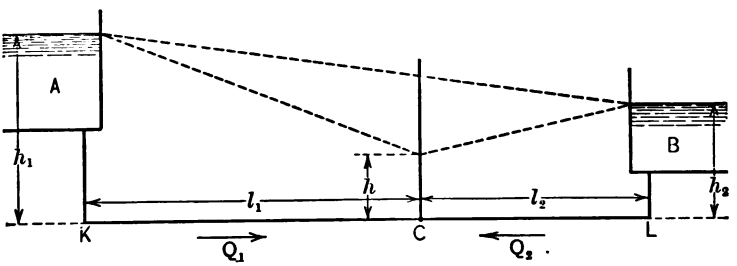

FIG. 33. — A pipe fed from two reservoirs.

during the hours of light demand supplies not only the entire city but also replenishes the auxiliary reservoir B. During the hours of heavy demand both reservoirs discharge into the city mains. This arrangement permits of a reduction in the size of the pumps, the utilization of the full pumping capacity nearly all the time,

and the maintenance of a more uniform pressure in the mains throughout the day. With this arrangement several interesting practical problems arise in regard to the interchange of water between the two reservoirs, the direction of flow in the connecting pipe, the time necessary for a change in the level of the water in the reservoirs, etc.

Prob. 14. — The cross-connecting pipe KL (Fig. 33) is connected at C to another pipe in which the demand R is variable. Find the relation between this demand and the head h at C; also the parts Q_1 and Q_2 of the demand that are supplied from reservoirs A and B respectively. The levels at A and B are given and are assumed to be constant. *Solution.* — According to Eq. (4) we have: $h_1 - h = cQ_1^2l_1/D^5$, and $h_2 - h = cQ_2^2l_2/D^5$; moreover, $Q_1 + Q_2 = R$. These three equations contain three unknown quantities, h, Q_1, and Q_2. Eliminating Q_1 and Q_2 we find the following equation for h:

$$\sqrt{(h_1 - h)/l_1} + \sqrt{(h_2 - h)/l_2} = \sqrt{c} \cdot R/D^{\frac{5}{2}},$$

which is the required relation between R and h. Knowing h, the quantities Q_1 and Q_2 are easily determined from the first two equations.

Prob. 15. — In the preceding problem investigate the case when $h > h_2$, according to the upper line of charge in Fig. 33. *Hint.* — Reservoir A supplies not only the pipe at C, but also feeds the auxiliary tank B. The sign of Q_2 in the equations must be reversed. In the limiting case when $h = h_2$, the line of charge between B and C is horizontal; this means that no water is supplied from B, and $R = Q_1$.

Prob. 16. — Apply the formulæ of the two preceding problems to the case where the difference of the levels between A and B is 6 m., the pipe is 60 cm. in diameter, 2500 m. long and point C is 900 m. distant from B. Plot to values of R as abscissæ, the corresponding values of loss of head in both parts of the pipe, and the rates of discharge Q_1 and Q_2, with the proper sign. On the basis of the curves discuss the influence of the auxiliary reservoir in assisting to maintain a better pressure, and in equalizing fluctuations in the demand upon the main reservoir. *Hint.* — The solution depends upon the differences of levels, and not upon their absolute

values. The absolute levels limit only the maximum value of R, since h cannot be less than -10.4 m., corresponding to a discharge into vacuum. For a discharge into the atmosphere, without any free head left, $h = 0$ (see the next problem).

Prob. 17. — Calculate, as in Prob. 16, the values of Q_1 and Q_2 when $h_1 = 36$ m. and $h_2 = 30$ m.; the discharge R at C takes place directly into the atmosphere, so that h is nearly equal to zero.

Ans. $Q_1 = 861$ l./sec.; $Q_2 = 1047$ l./sec.

Prob. 18. — The demand, instead of being concentrated at a point C (Fig. 34), is distributed uniformly throughout AB, at a rate of p liters per meter. Find the discharge Q_1 and Q_2 from both reservoirs, the shape of the curve of charge acb and the point C of

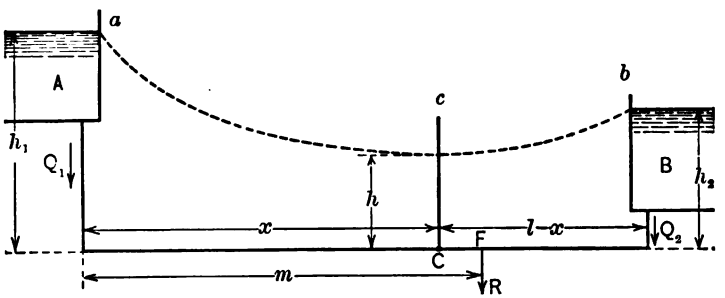

FIG. 34. — A pipe fed from both ends, with a uniformly distributed demand.

division of supply. *Solution.* — Let C be the unknown point of division of supply; to the left of this point the demand is supplied by reservoir A, to the right by reservoir B. The line of charge has a minimum at C. According to Prob. 7, we have for the left-hand side $h_1 - h = \frac{1}{3} c\,(px)^2 \cdot x/D^5$, and for the right-hand side $h_2 - h = \frac{1}{3} c\,[p\,(l - x)]^2\,(l - x)/D^5$. Subtracting one equation from the other in order to eliminate h, a cubic equation for x is obtained. When $h_2 = h$, the second equation gives $x = l$, and the first $h_1 - h_2 = \frac{1}{3} cp^2l^3/D^5$. The rate p determined from this equation is such that reservoir A supplies the whole demand. If the demand falls below this rate, the tank A will begin to supply water to tank B.

Prob. 19. — Apply the method indicated in the preceding problem to the case of a 100 cm. pipe 2000 m. long, the difference of the levels between the two reservoirs being 4 m., and the level in the

main reservoir 60 m. above the pipe. Find the rates of demand p at which $x = \frac{1}{4}l$, $\frac{1}{2}l$, and $\frac{3}{4}l$; also the minimum rate below which reservoir A not only supplies the whole demand but also replenishes tank B.

Prob. 20. — The demand is uniformly distributed (Fig. 34), as in Prob. 18, and in addition there is a concentrated demand R at a given point F of the pipe, determined by the distance m. Find an expression for the position of the point C of division of the load, and the equation of the line of charge.

Ans. If $m > x$; $h_1 - h_2 = (c/D^5)\,(\frac{2}{3}p^2x^3 - p^2mx^2 + p^2m^2x - R^2l$
$+R^2m - Rpl^2 + 2Rplm - Rpm^2 - p^2l^3/3 + p^2l^2m - p^2lm^2)$;
If $m < x$; $h_1 - h_2 = (c/D^5)(p^2x^3 + Rpx^2 - p^2lx^2 + R^2x + p^2l^2x$
$- p^2m^3/3 - p^2l^3/3)$.

Prob. 21. — The original difference of levels in the reservoirs (Fig. 33) is h'. Find the difference of the levels h'' after an interval of time T, when the water is allowed to equalize freely between the two reservoirs and there is no demand in the branch pipe at C.

Solution. — Eq. (4) gives

$$h = h_1 - h_2 = cQ^2l/D^5, \quad . \quad . \quad . \quad . \quad . \quad . \quad (10)$$

where h_1, h_2, and Q are functions of time, so that the equation applies only to an infinitesimal interval of time dt. As much water flows out of A as flows into B, so that

$$-F_1\,dh_1 = F_2\,dh_2 = Q\,dt. \quad . \quad . \quad . \quad . \quad . \quad (11)$$

In these equations F_1 and F_2 stand for the constant areas of horizontal cross sections of the reservoirs. The minus sign before dh_1 is necessary because h_1 decreases with time so that dh_1 is a negative quantity; the minus sign makes it positive. Otherwise it could not be equal to $F_2\,dh_2$ and to $Q\,dt$, both of which are essentially positive quantities. From Eqs. (10) and (11) the variables h_1, h_2, and Q may be eliminated and the resultant equation containing h and t can be integrated.

Differentiating the first two members of Eq. (10) and comparing them with the first two members of Eq. (11), we get: $dh_1 = F_2\,dh/(F_1 + F_2)$, while from Eq. (10) $Q = D^{\frac{5}{2}} \cdot \sqrt{h}/\sqrt{cl}$. Substituting these values in Eq. (11) we obtain

$$-\frac{F_1F_2}{F_1 + F_2} \cdot dh = \frac{D^{\frac{5}{2}}}{\sqrt{cl}} \cdot \sqrt{h} \cdot dt.$$

We introduce, for the sake of abbreviation, $F = F_1F_2/(F_1 + F_2)$, and $a = D^{\frac{5}{2}}/\sqrt{cl}$. Then

$$-\int_{h'}^{h''} dh/\sqrt{h} = (a/F)\int_0^T dt,$$

or finally,

$$\sqrt{h'} - \sqrt{h''} = (a/2F)\cdot T. \quad . \quad . \quad . \quad . \quad . \quad (12)$$

The final difference of levels h'' is determined from this equation. If $h'' = 0$, Eq. (12) gives the amount of time necessary for equalizing the levels in the two reservoirs.

Prob. 22. — In the preceding problem determine the changes in the levels, Δh_1 and Δh_2, in the two reservoirs.

Ans. $\Delta h_1 = F_2(h' - h'')/(F_1 + F_2)$.

Prob. 23. — Solve Prob. 21, using Eq. (5) instead of Eq. (4).

Ans. $(h')^q - (h'')^q = qbT$, where $q = 1 - m^{-1}$, and $b = D^{n/m}/(kl)^{1/m}$.

Prob. 24. — Solve Prob. 21 when a quantity of water Q_1 per second is pumped into reservoir A, and a quantity Q_2 is withdrawn from reservoir B. *Hint.* — Using Eq. (11) we obtain: $-F_1\,dh_1 = (Q - Q_1)\,dt$, and $F_2\,dh_2 = (Q + Q_2)\,dt$. After eliminating h_1 and h_2 the result is

$$T = -\int_{h'}^{h''} \frac{F_1F_2\,dh}{a(F_1 + F_2)\sqrt{h} + (F_1Q_2 - F_2Q_1)},$$

where $a = D^{\frac{5}{2}}/\sqrt{cl}$. The integral is reduced to a simple standard form by introducing a new variable $z = \sqrt{h}$.

Pipe Line of Varying Diameter.

Prob. 25. — A street main has been gradually extended, so that at a certain time it consists of sections of different lengths l_1, l_2, etc., and of diameters D_1, D_2, etc. It is desired to replace this by a new pipe of a uniform diameter that would give the same loss of head at the end, with the same rate of discharge. Find the diameter D_{eq} of this equivalent new main. *Solution.* — According to Eq. (4),

$$\frac{\Sigma l}{D_{eq}^5} = \sum \frac{l}{D^5};$$

from this relation D_{eq} may be calculated. If Eq. (5) be used, the exponent 5 must be replaced by n.

Prob. 26. — A conical pipe has a diameter D_1 at one end and D_2 at the other end. The length of the pipe is l. Find the expression for the loss of head. *Solution.* — According to Eq. (4)

$$h = cQ^2\int_0^l \frac{dx}{D^5}, \quad . \quad . \quad . \quad . \quad . \quad . \quad . \quad . \quad (13)$$

where the diameter at the distance x from the end D_1 is

$$D = D_1 + (D_2 - D_1) \cdot x/l, \quad . \quad . \quad . \quad . \quad . \quad (13a)$$

so that $dD = (D_2 - D_1) \cdot dx/l$. Substituting, we get

$$h = \frac{cQ^2 \cdot l}{D_2 - D_1} \int_{D_1}^{D_2} \frac{dD}{D^5} = \frac{cQ^2 l}{4\,(D_2 - D_1)} \left\{ \frac{1}{D_1^4} - \frac{1}{D_2^4} \right\}. \quad . \quad (14)$$

This formula is inconvenient for computations when D_2 differs but little from D_1, because the differences $(D_2 - D_1)$ and $(D_2^4 - D_1^4)$ are very small, and a minor inaccuracy in each may affect the result to a considerable degree. In this case put $D_2 = D_1\,(1 + \alpha)$, where α is a small quantity as compared with 1. Substituting we obtain

$$h = \frac{cQ^2 l}{4\,D_1^5 \cdot \alpha} \left\{ 1 - \frac{1}{(1 + \alpha)^4} \right\}.$$

Expand $(1 + \alpha)^{-4}$ according to the binomial theorem, subtract the series from 1, and divide the result by α. Then

$$h = \frac{cQ^2 l}{D_1^5} \{ 1 - 2.5\,\alpha - 5\,\alpha^2 - \cdots \}. \quad . \quad . \quad . \quad (15)$$

The correction α being a small quantity, the rest of the terms of the series may be neglected. The expression in the brackets shows the effect of tapering the pipe, as compared with a cylindrical pipe.

This method of transformation will be found useful in other problems in physics and in engineering, when one has to subtract two quantities nearly equal to each other.

Prob. 27. — Investigate the relative advantages and convenience of formulæ (15) and (14) when D_2 is greater than D_1 by 1, 3, 10, and 100 per cent respectively.

Prob. 28. — A conical pipe 100 m. long has a diameter of 5 cm. at one end and 12 cm. at the other end. What is the diameter of an equivalent cylindrical pipe, that is, of a pipe of the same length which gives the same total loss of head at the same rate of discharge? *Ans.* 7.1 cm.

Prob. 29. — Deduce the equation of the line of charge for a conical pipe. *Ans.* $h_x = \dfrac{cQ^2 l}{4\,(D_2 - D_1)} \left\{ \dfrac{1}{D_1^4} - \dfrac{1}{\left(D_1 + \dfrac{D_2 - D_1}{l}\,x\right)^4} \right\}.$

Prob. 30. — Plot the line of charge for the conical pipe given in Prob. 28, and for the equivalent cylindrical pipe, the total loss of charge being in both cases 0.2 m.

Prob. 31. — For a conical pipe deduce an expression corresponding to formula (9). *Hint.* $H = c\int_0^l [R + p(l - x)]^2 \, dx/D^5$, where D is given in Eq. (13a). In order to perform the integration, take D for the independent variable, and express x in terms of D.

Prob. 32. — Show how to modify formulæ (14) and (15) when the increase in the diameter of the pipe is proportional to the square of the length, so that Eq. (13a) becomes

$$D = D_1 + (D_2 - D_1)(x/l)^2. \quad . \quad . \quad . \quad . \quad . \quad (16)$$

Also extend the treatment to the case when the increase in the diameter is proportional to some nth power of the length, or in general when D is a given function of x.

Problems Involving Minimum Expense.

In deciding upon the sizes of pipes and pumps, and upon the general layout of a water supply system, the commercial question of minimum expense enters as one of the most important factors. To design a water supply system, including the pumping station, the reservoirs, and the mains, so as to have the most economical installation, both as to first cost and cost of operation, is the problem that confronts the engineer and at the same time makes his task much more definite than it would be otherwise. The economy problem is different in different cases; for instance, it may be required to design a plant in such a way as to obtain minimum first cost of installation irrespective of operating expenses; or minimum operating expenses may be desired irrespective of first cost; sometimes maximum net revenue is important, etc.

It is hardly possible or even desirable to express in the form of equations the practical problem in all its complexity. Moreover, the values that correspond to an absolute minimum, according to the rules of the differential calculus, may not be the best, considering the

fact that the engineer is limited to comparatively few standard sizes of pipes and pumps. However, the various parts of the problem may be worked out mathematically and thus furnish at least a first approximation as to the size of the pumping engines, diameter of the mains, etc. The method is explained below with the aid of a number of problems graded from the simplest to those comparatively complicated. Many of these problems are applicable with certain modifications to electrical distribution; conductors being substituted for pipes, and generating sets for pumping engines. See Chapters II and III, in Part V of this work.

The fundamental assumption made is that the unit prices of machinery and pipes are known functions of their sizes. Thus, the cost of an installed pipe includes the cost of the pipe itself, the work of making the trench and filling it, of connecting the sections, transporting the pipe, etc. Part of this expense, such as the cost of the pipe itself and its transportation, depends upon the size of the pipe; other items of expense, for instance digging the trench, are practically independent of the size of pipe. Thus, in the simplest case the cost per meter of installed pipe may be expressed by $a + bD$, where a represents the expense independent of the size of the pipe, and bD is the part proportional to the selected diameter D of the pipe. The cost of installation of a system of pipes is therefore $\Sigma l\,(a + bD)$, and this expression must be a minimum; or

$$a\Sigma l + b\Sigma lD = \text{min.}$$

In most cases the lengths or at least the sum of the lengths of the pipes is a fixed quantity, so that the above condition is reduced simply to

$$\Sigma lD = \text{min.} \quad . \quad . \quad . \quad . \quad . \quad (17)$$

Prob. 33. — A pipe line of length l must supply a given quantity of water Q per second, at a given loss of pressure h. It is proposed to make it out of two sections in series, so as to reduce the expense to a minimum. Find the diameter and the length of each section.

Solution. — In order to obtain a more general answer Eq. (5) will be used. Let l_1, l_2, D_1, and D_2 be the unknown lengths and the diameters of the sections. The conditions of the problem may be expressed thus:

$$h = kQ^m \left\{ \frac{l_1}{D_1^n} + \frac{l_2}{D_2^n} \right\}. \quad . \quad . \quad . \quad . \quad . \quad (18)$$

$$l_1 + l_2 = l. \quad . \quad . \quad . \quad . \quad . \quad . \quad . \quad . \quad (19)$$

$$l_1 (a + bD_1) + l_2 (a + bD_2) = \text{min.}$$

By omitting the constant part, the last equation may be simplified to an equation corresponding to Eq. (17), thus:

$$l_1 D_1 + l_2 D_2 = \text{min.} \quad . \quad . \quad . \quad . \quad . \quad . \quad . \quad (20)$$

The answer to the problem may be foreseen directly from the fact that the two variables D_1 and D_2 enter into the equations symmetrically, and so do the other two variables l_1 and l_2. The answer therefore must be $D_1 = D_2$ and $l_1 = l_2$; in other words, pipe of one diameter is cheaper than that of two, whatever their diameters may be.

If, however, an exact solution is required, it may be obtained according to the general rule for finding relative maxima and minima.

Multiply Eqs. (18) and (19) by indeterminate coefficients λ_1 and λ_2, and add to Eq. (20). The result is

$$\lambda_1 \left\{ \frac{l_1}{D_1^n} + \frac{l_2}{D_2^n} - \frac{h}{kQ^m} \right\} + \lambda_2 (l_1 + l_2 - l) + l_1 D_1 + l_2 D_2 = \text{min.}$$

Partial derivatives with respect to D_1, D_2, l_1, and l_2, equated to zero, give:

$$-\frac{n\lambda_1 l_1}{D_1^{n+1}} + l_1 = 0; \qquad \frac{\lambda_1}{D_1^n} + \lambda_2 + D_1 = 0;$$

$$-\frac{n\lambda_1 l_2}{D_2^{n+1}} + l_2 = 0; \qquad \frac{\lambda_1}{D_2^n} + \lambda_2 + D_2 = 0.$$

From the first two equations, $\lambda_1/D_1^n = D_1/n$, and $\lambda_1/D_2^n = D_2/n$. Substituting these values in the last two equations, we easily obtain $D_1 = D_2$, or the pipe must be of the same diameter throughout.

A similar treatment applies to electrical conductors in series; see Part V, Chap. II, Prob. 1.

Prob. 34. — A 60 cm. pipe supplies water to a reservoir, with a given loss of head. What would be the extra cost of the pipe line if one half of the pipe were replaced by a larger pipe D_1 cm. in diameter and the other half by a smaller pipe so as to have the same total loss of head as before? Plot a curve showing extra expense for D_1 equal to 60, 70, 80, 90, and 100 cm., assuming the expense for 60 cm. pipe to be 100 per cent; also plot the corresponding values of D_2. Consider the total expense to be represented by formula (20); use formula (4) instead of formula (5). *Hint.* $(60)^{-5} = 0.5\,(D_1^{-5} + D_2^{-5})$; per cent extra expense $= 100\,(0.5\,D_1 + 0.5\,D_2 - 60)/60$.

Prob. 35. — Two pipes in parallel, of diameters D_1 and D_2 respectively, supply a reservoir. Show that for the same service one larger pipe would be cheaper.

Solution. — Let the diameter of the equivalent pipe be D_{eq}. Then we have, according to Eq. (4): $Q_1 = \sqrt{D_1^5} \cdot \sqrt{i/c}$; $Q_2 = \sqrt{D_2^5} \cdot \sqrt{i/c}$; $Q = \sqrt{D_{eq}^5} \cdot \sqrt{i/c}$, and $Q = Q_1 + Q_2$.

From these equations we obtain by adding the first two and equating their sum to the third:

$$\sqrt{D_{eq}^5} = \sqrt{D_1^5} + \sqrt{D_2^5}. \quad . \quad . \quad . \quad . \quad . \quad (21)$$

This equation determines the diameter of the equivalent pipe. In order to prove that one pipe is cheaper than the two, it is necessary to demonstrate that

$$D_{eq} < D_1 + D_2. \quad . \quad . \quad . \quad . \quad . \quad . \quad (22)$$

To do this, raise both sides of Eq. (21) to the power of 2/5, using the binomial expression. The result is that $D_{eq} = D_1 + D_2 +$ other positive terms, whence inequality (22) follows directly.

It there are more than two pipes in parallel, the cost of installation may be reduced by replacing any two by a larger pipe; then again this pipe may be combined with another, and so forth, so that finally one pipe, whose diameter is determined from the relation $\sqrt{D_{eq}^5} = \Sigma\sqrt{D^5}$, is more economical than any given system of pipes in parallel. A similar result may be proved for electrical conductors in parallel.

Prob. 36. — A 60 cm. pipe supplies a reservoir. Show how much more expensive the installation would be if there were two supply pipes in parallel, of which one might be of diameter $D_1 = 50$, 40,

30, 20, 10 cm., and the other of such a diameter D_2 as to give the required discharge at the specified loss of head. Assume the cost of the original pipe to be 100 per cent, and represent the results by curves.

Ans. For $D_1 = 30$ cm., $D_2 = 55.5$ cm., cost = 142.5 per cent.

Prob. 37. — A water main carries Q_1 liters per sec. for a distance l_1 (Fig. 35), and Q_2 for a distance l_2. Determine the diameters of

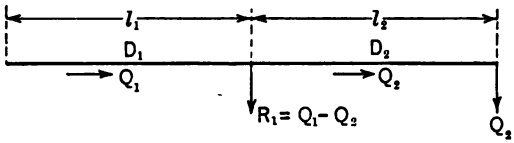

FIG. 35. — A composite water main with a branch pipe.

the two parts of the main so that its cost will be a minimum, for a given total loss of head. *Solution.* —

$$\frac{cl_1Q_1^2}{D_1^5} + \frac{cl_2Q_2^2}{D_2^5} = h, \quad . \quad . \quad . \quad . \quad . \quad . \quad (23)$$

$$l_1D_1 + l_2D_2 = \text{min.} \quad . \quad . \quad . \quad . \quad . \quad (24)$$

The complete differential of the left-hand member of the first equation is equal to zero, because h is a constant; the complete differential of the left-hand member of the second equation is also equal to zero, this being the condition for a minimum. Thus

$$l_1Q_1^2\, dD_1/D_1^6 + l_2Q_2^2\, dD_2/D_2^6 = 0,$$

and

$$l_1\, dD_1 + l_2\, dD_2 = 0.$$

Substituting $l_1\, dD_1$ from the second equation into the first we get after reduction:

$$D_1/D_2 = \sqrt[3]{Q_1/Q_2}; \quad . \quad . \quad . \quad . \quad . \quad . \quad (25)$$

this equation, together with Eq. (23), allows one to determine the unknown diameters D_1 and D_2.

Prob. 38. — Show that in the preceding problem the hydraulic gradient is greater in the first pipe than in the second, and that for a minimum cost the diameters of the pipes must be as their hydraulic gradients.

Prob. 39. — Solve Prob. 37 using Eq. (5) instead of Eq. (4).

$$Ans.\quad \frac{D_1}{D_2} = \left(\frac{Q_1}{Q_2}\right)^{\frac{m}{n+1}}.$$

Prob. 40. — Extend Prob. 37 to the case when there are more than two sections in series. *Solution.* —

$$c\sum \frac{lQ^2}{D^5} = h, \quad . \quad . \quad . \quad . \quad . \quad . \quad . \quad . \quad (26)$$

$$\Sigma lD = \text{min.} \quad . \quad . \quad . \quad . \quad . \quad . \quad . \quad (27)$$

According to the general rule for relative maxima and minima, we form the expression

$$B = \left(\sum \frac{lQ^2}{D^5} - \frac{h}{c}\right) + \lambda \Sigma lD,$$

where λ is an indeterminate coefficient. The partial derivatives of B with respect to all D's must be separately equal to zero. All these derivative equations are the same form:

$$-\frac{5\, l_k Q_k^2}{D_k^6} + \lambda l_k = 0,$$

from which

$$\frac{D_k^3}{Q_k} = \sqrt{\frac{5}{\lambda}} = \text{const.},$$

so that

$$\frac{D_1^3}{Q_1} = \frac{D_2^3}{Q_2} = \ldots = \sqrt{\frac{5}{\lambda}}. \quad . \quad . \quad . \quad . \quad . \quad . \quad (28)$$

This expression is analogous to Eq. (25). Coefficient λ is determined by substituting the values of D's from Eqs. (28) in Eq. (26).

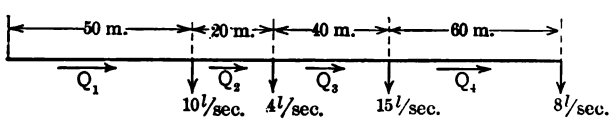

FIG. 36. — A street main of tapering diameter.

Prob. 41. — Determine the most economical sizes of pipe for the main shown in Fig. 36, when the total permissible loss of head is 10 m. The amounts of discharge shown in the figure represent delivery to side streets. Thus $Q_1 = 10 + 4 + 15 + 8$ l./sec.; $Q_2 = 4 + 15 + 8$ l./sec.; etc.

Ans. $D_1 = 12.54$ cm.; $D_2 = 11.91$ cm.; $D_3 = 11.6$ cm.; $D_4 = 9.72$ cm.

Prob. 42. — Calculate the three diameters of a branched main (Fig. 37) to correspond to a minimum expense of installation. The rates of discharge and the total permissible loss of head h from A to B and from A to C are given. *Solution.* — Let the unknown loss of head from A to K be x. Then we have four conditions: $x =$

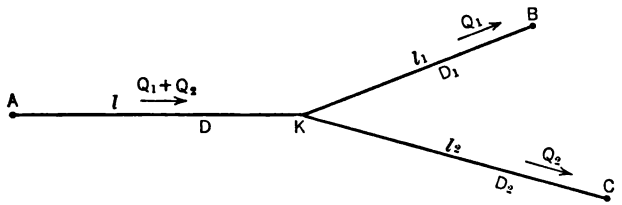

FIG. 37. — A branched main.

$c\,(Q_1 + Q_2)^2 l/D^5$; $(h - x) = cQ_1^2 l_1/D_1^5$; $(h - x) = cQ_2^2 l_2/D_2^5$; and $lD + l_1D_1 + l_2D_2 = \text{min.}$ Substituting the values of D, D_1, and D_2, from the first three equations in the last, we obtain

$$\frac{(Q_1 + Q_2)^{\frac{2}{5}} l^{\frac{2}{5}}}{x^{\frac{1}{5}}} + \frac{Q_1^{\frac{2}{5}} l_1^{\frac{2}{5}}}{(h - x)^{\frac{1}{5}}} + \frac{Q_2^{\frac{2}{5}} l_2^{\frac{2}{5}}}{(h - x)^{\frac{1}{5}}} = \text{min.}$$

Equating the first derivative to zero, and rearranging the terms we get

$$\frac{(Q_1 + Q_2)^{\frac{2}{5}} l^{\frac{2}{5}}}{x^{\frac{6}{5}}} = \frac{Q_1^{\frac{2}{5}} l_1^{\frac{2}{5}}}{(h - x)^{\frac{6}{5}}} + \frac{Q_2^{\frac{2}{5}} l_2^{\frac{2}{5}}}{(h - x)^{\frac{6}{5}}},$$

from which $x = h/(1 + n)$, where

$$n = \frac{[Q_1^{\frac{2}{5}} l_1^{\frac{2}{5}} + Q_2^{\frac{2}{5}} l_2^{\frac{2}{5}}]^{\frac{5}{6}}}{l\,(Q_1 + Q_2)^{\frac{1}{3}}}.$$

Prob. 43. — Extend the result obtained in the preceding problem to the case when there are several branches at K, instead of two; also when formula (5) is used instead of formula (4).

Ans. $x = h/(1 + n)$ where $n = \dfrac{\{\Sigma Q^{\frac{2}{5}} l^{\frac{2}{5}}\}^{\frac{5}{6}}}{l\,(\Sigma Q)^{\frac{1}{3}}}$.

Prob. 44. — Referring to Probs. 42 and 43, and to Fig. 37, let the total loss of head be different for each point, such as B, C, etc. Show that the problem can be solved only by trial and successive approximations, and indicate a convenient order of computations.

Prob. 45. — Solve Prob. 43 using the method of indeterminate coefficients, as in Prob. 33, and show that it leads to the relationship

$$\frac{D^{n+1}}{\Sigma Q_k^m} = \sum \frac{D_k^{n+1}}{Q_k^m}.$$

Prob. 46. — Establish equations for minimum expense for the branched pipe line shown in Fig. 38. *Hint.* — As the independent

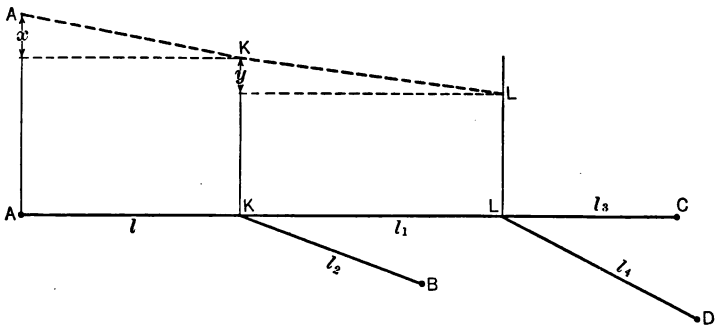

FIG. 38. — A branched pipe line.

variables, select the loss of head x from A to K, and the loss of head y from K to L.

$$Ans. \quad \frac{(Q_C+Q_D)^{\frac{3}{2}} l_1^{\frac{5}{2}}}{y^{\frac{5}{2}}} = \frac{Q_C^{\frac{3}{2}} l_3^{\frac{5}{2}}}{(h_C - x - y)^{\frac{5}{2}}} + \frac{Q_D^{\frac{3}{2}} l_4^{\frac{5}{2}}}{(h_D - x - y)^{\frac{5}{2}}};$$

and

$$\frac{(Q_C+Q_D)^{\frac{3}{2}} l_1^{\frac{5}{2}}}{y^{\frac{5}{2}}} = \frac{(Q_B+Q_C+Q_D)^{\frac{3}{2}} l^{\frac{5}{2}}}{x^{\frac{5}{2}}} - \frac{Q_B^{\frac{3}{2}} l_2^{\frac{5}{2}}}{(h_B - x)^{\frac{5}{2}}}.$$

Prob. 47. — Referring to the preceding problem, find the pipe diameters for the following conditions: $Q_B = 25$ l./sec.; $Q_C = 10$ l./sec.; $Q_D = 60$ l./sec.; $l = 50$ m.; $l_1 = 70$ m.; $l_2 = 160$ m.; $l_3 = 120$ m.; $l_4 = 70$ m.; $h_B = 10$ m.; $h_C = h_D = 12.5$ m.

Ans. $D = 22.1$ cm.; $D_1 = 18.1$ cm.; $D_2 = 7.8$ cm.; $D_3 = 8.5$ cm.; $D_4 = 15.7$ cm.

Prob. 48. — A reservoir (Fig. 39) is to be fed by gravity from the river AB through a pipe AM. Find point A at which the pipe must originate in order to make its cost a minimum. By making the pipe longer, the hydraulic gradient i is increased so that the diameter of the pipe may be reduced for the same Q. Since the cost of the pipe is proportional to Dl, there must be values of D and l which will make this expression a minimum. *Solution.* — Let I be the

slope of the river, or the trigonometric tangent of the angle which its surface makes with the horizontal. Then we have from the triangle AMN:

$$h = l\,(I - i). \quad . \quad . \quad . \quad . \quad . \quad . \quad . \quad . \quad (29)$$

Besides

$$i = cQ^2/D^5, \quad . \quad . \quad . \quad . \quad . \quad . \quad . \quad . \quad (30)$$

and

$$lD = \text{min.} \quad . \quad . \quad . \quad . \quad . \quad . \quad . \quad . \quad . \quad (31)$$

Eliminating l and D from Eq. (31) by means of Eqs. (29) and (30) we find that $i^{-\frac{1}{2}}\,(I - i)^{-1}$ must be a minimum, or $i^{\frac{1}{2}}\,(I - i)$ must be

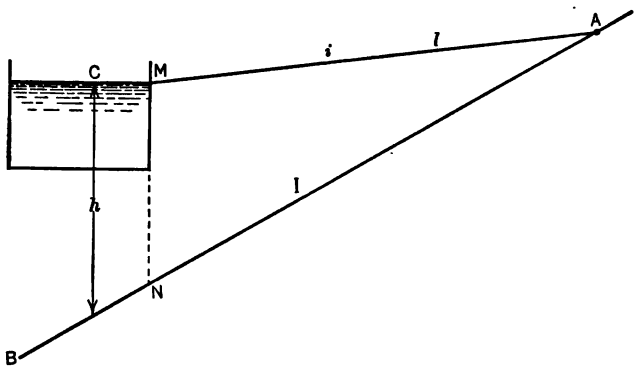

FIG. 39. — A reservoir fed by gravity from a river.

a maximum. According to the familiar rule of the differential calculus we find that $i = \frac{1}{3}\,I$. This determines the length and the diameter of the pipe.

Prob. 49. — In Prob. 48 the cost of the trench and condemnation of the ground is to be taken into account. *Solution.* — Let p be the cost of the ground and excavation per linear foot of the pipe line; this cost is practically independent of the diameter of the pipe. Let q be the cost of the pipe per linear foot and per unit diameter. Then expression (31) becomes

$$(qD + p)\,l = \text{min.} \quad . \quad . \quad . \quad . \quad . \quad . \quad . \quad . \quad (32)$$

Eliminating l and D as before, an equation is obtained for i which is then solved for a minimum. In this case it is simpler, however, to eliminate i and l, and to establish an equation with respect to D. Before doing this, it is convenient also to eliminate Q, and thus

to make the equation more symmetrical by introducing a known fictitious diameter Δ such that

$$I = cQ^2/\Delta^5. \quad . \quad . \quad . \quad . \quad . \quad . \quad . \quad . \quad (33)$$

Eq. (30) becomes

$$i = I\,(\Delta/D)^5. \quad . \quad . \quad . \quad . \quad . \quad . \quad . \quad . \quad (34)$$

Substituting the values of l and i from Eqs. (29) and (34) into Eq. (32) we obtain, after omitting the constant factors:

$$\frac{\dfrac{D}{\Delta} + \dfrac{p}{q\Delta}}{1 - \left(\dfrac{D}{\Delta}\right)^{-5}} = \text{min.}$$

In this equation it is convenient to consider the ratio (D/Δ) as the variable; differentiating with respect to this variable and equating the derivative to zero gives the following equation of the sixth degree:

$$\left(\frac{D}{\Delta}\right)^6 - 6\left(\frac{D}{\Delta}\right) - \frac{5p}{q\Delta} = 0. \quad . \quad . \quad . \quad . \quad . \quad (35)$$

This equation can be solved graphically, or by the method of successive approximations.

Prob. 50. — Show that in Eq. (35) the value of (D/Δ) is always larger than 1.43. *Hint.* — Put $p = 0$.

Prob. 51. — Using Eq. (35), plot a graph of values of (D/Δ) corresponding to values of $p/q\Delta$ from 0 to 2. Analyze the practical significance of such a curve.

Prob. 52. — A pumping station must supply Q liters of water per second to a reservoir at a height H above a river and distant l meters from it. Determine the capacity of pumping engines and the diameter of the pipe such as to reduce the first cost of the whole installation to a minimum. *Solution.* — The output of the pumping engines is spent partly in lifting the quantity Q of water to a given height H and partly in overcoming friction in the pipe. The first item is fixed, the second depends upon the diameter of the pipe. If a smaller and thus less expensive pipe be selected, more work will be required for overcoming friction, and vice versa. The loss of head, according to formula (4), is $h = cQ^2l/D^5$, and the power wasted, corresponding to this loss, is $cQ^3l/(D^5\eta)$ kg. met. per second, where η is the mechanical efficiency of the engines.

Let the cost of one additional indicated unit of power of the engines, boilers, pumps, foundations, etc., be p dollars, and let the cost of pipe per linear meter and per centimeter of diameter be q dollars. Then the condition of minimum cost becomes

$$pcQ^3l/(D^5\eta) + qlD = \text{min.}$$

This expression becomes a minimum when $D = \sqrt{Q} \cdot \sqrt[6]{5\,pc/(q\eta)}$. The student should satisfy himself as to the physical reason for which this value of D is independent of l.

Prob. 53. — In the preceding problem determine the size of the pipe in such a way that the total operating expense, including the interest and depreciation on the plant, will be a minimum. *Solution.* — If a be the rate of interest and depreciation for the pumping-station equipment, b that for the pipe, and f the cost of operating the plant per extra unit of power per year, the expression for the operating expense becomes

$$cQ^3l\,(ap + f)/D^5\eta + bqlD = \text{min.},$$

which is solved for D as before.

Prob. 54. — How would the foregoing expression be modified if the plant were operated only one nth part of the year, instead of the whole year? Would a larger or a smaller diameter of pipe be selected, as compared with the pipe selected when the plant is in continuous operation?

Ans. $D = \sqrt[6]{\dfrac{5\,c\,(ap + f/n)}{bq\eta}}\,\sqrt{Q}.$

CHAPTER VI.

BEST FORM OF CHANNEL SECTION.

WHEN an open channel, such as an aqueduct or a sewer, is arranged for a flow of water, the bottom of the channel must be given a longitudinal slope in order to overcome the friction of water against the walls. It is desirable to give the cross section of the channel such a form as to reduce this friction to a minimum. The quantity of water Q discharged per minute is usually given, as is also the desirable average velocity v of flow. Hence, according to the equation

$$Q = vA, \quad . \quad . \quad . \quad . \quad . \quad . \quad . \quad . \quad (1)$$

the area A of the cross section of the channel is a definite given quantity. The problem is to find such a shape of the cross section that the friction will be a minimum. The friction of liquids against a solid wall is proportional to the wetted surface, or, per unit length of the channel, is proportional to the wetted perimeter of the cross section. Hence, to reduce the friction, the wetted perimeter must be kept as low as possible. The problem is thus reduced to the following geometrical proposition:

To find the form of a cross section which for a given area possesses a minimum perimeter.

Of all possible geometric forms the circle has the absolute minimum of perimeter for a given area. For this reason a round pipe is the most rational form where it can be used. For an open canal, a semicircular

cross section is just as good, because while the area is halved the wetted perimeter is also cut in two.

It is not practicable, however, on account of expense, to provide canals which are dug out in the ground, or even those lined with masonry or concrete, with a semicircular cross section. Next to the circle, regular polygons (Fig. 40) possess a comparatively small perimeter for a given area, the perimeter being the smaller the larger the number of sides, in other words, the more closely the polygon approaches the circle. Thus, when

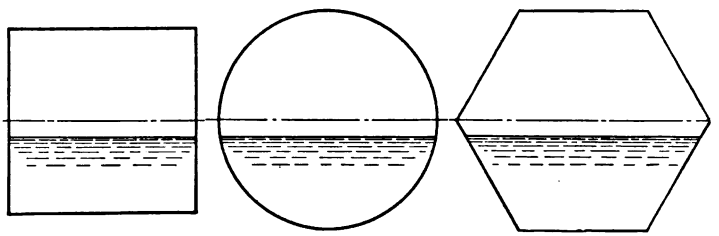

FIG. 40. — Some cross sections of channels.

a pipe cannot be made round, for instance when it is made out of boards, like big penstocks for hydraulic plants, it should be made hexagonal or square. In the case of open channels, the corresponding cross sections are found by taking the lower part of the figures (Fig. 40), because the area and the wetted perimeter are reduced in the same proportion.

There are many practical cases in which regular cross sections cannot be used, for instance, when the slope of the sides of a channel is prescribed in order to keep them from sliding, when the depth of a canal is prescribed for navigation, etc. In such cases the shape of the cross section may be found according to the general rule given in the differential calculus for finding relative maxima and minima.

Prob. 1. — Prove that the best form of a rectangular cross section for an open channel is one with the width equal to twice the depth.

First Solution. — Let the depth of water be y; then the width of the channel is A/y, where A is the given area of cross section. Hence the wetted perimeter $P = 2y + A/y = \text{min.}$ This expression becomes a minimum, when $dP/dy = 2 - A/y^2 = 0$, or $y = \sqrt{\frac{1}{2}A}$. The width A/y is equal to $\sqrt{2A}$ or $2y$.

Second Solution. — Let the width be x and the depth y; then we have two equations:

$$A = xy = \text{const.};$$
$$P = 2y + x = \text{min.};$$

$dA = 0$, because A is const.; $dP = 0$, because P must be a minimum; so that differentiating the two equations we get

$$x\,dy + y\,dx = 0;$$
$$2\,dy + dx = 0.$$

Eliminating dx and dy from these equations gives $x = 2y$, as before.

Theorem 1 in the Appendix may be applied in this case, because if $xy = \text{const.}$, $2y \cdot x$ is also a constant.

When for practical reasons it is not possible to give a channel the theoretically best possible cross section, it is desirable to ascertain at least in how far the shape actually selected departs from the one most advantageous. This means, how much greater longitudinal slope must be given the channel in order to obtain the same velocity of water as with the theoretically best form of cross section, or how much larger the cross section must be for the same discharge with the former slope, or how much less water will flow with the same area of cross section. The relationship between the quantities in the problem is obtained as follows:

Imagine a prism of water of length l and of cross section A (Fig. 41), which slides along a canal. The motion being uniform, the component of the weight

of the water along the bed must be equal to the retarding force of friction. We have thus

$$Alw \sin \alpha = fPl.$$

In this equation Alw is the weight of the water, α is the angle of inclination of the bed to the horizontal,

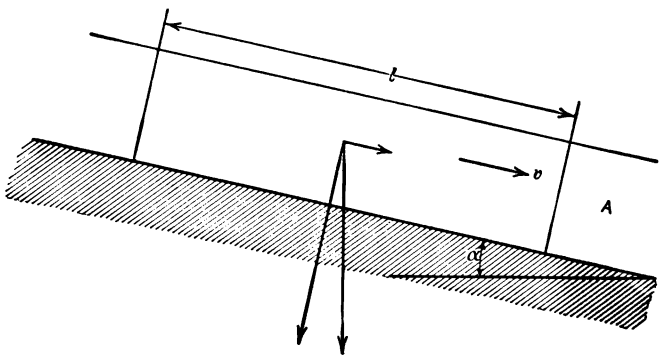

FIG. 41. — Motion of water in a canal.

f the force of friction per unit area, and Pl is the wetted surface.

Experiment shows that the unit force of friction f is nearly proportional to the square of velocity, or

$$f = \text{const.} \times v^2.$$

Angle α is usually so small that instead of $\sin \alpha$ we may substitute $\tan \alpha = i$, where i is the slope of the bed. We thus obtain

$$Awi = \text{const.} \times v^2P,$$

or, collecting the constants into one constant c, we finally get

$$v = c\sqrt{iA/P}, \quad . \quad . \quad . \quad . \quad . \quad (2)$$

which is the fundamental formula for the flow of water

in channels.* Combining Eq. (2) with Eq. (1), another fundamental formula is obtained.

$$Q = cA\sqrt{iA/P}. \quad . \quad . \quad . \quad . \quad . \quad (3)$$

Prob. 2. — A rectangular canal, in order to be of the most advantageous form, should have a depth h and a width $2h$. For certain practical reasons the depth has to be changed to ph, where p is a certain coefficient which may be greater or smaller than unity. It is desired to preserve the same cross section $2h^2$ and the same rate of flow of water, so that the longitudinal slope i must be increased q times. Find the relationship between p and q, plot the curve between them and define the curve mathematically. *Solution.* — If the new depth is ph, the width must be $2h/p$, and the new wetted perimeter $P' = 2ph + 2h/p$. But, according to formula (3), both the new and the old values of the slope must satisfy the relation $i'/i = P'/P$, or

$$q = \frac{2ph + 2h/p}{2h + 2h}.$$

Simplifying, this gives the required relationship

$$q = \frac{1}{2}\left(p + \frac{1}{p}\right).$$

If, for instance, the depth had been increased by 20 per cent, we would have

$$q = \frac{1}{2}\left(1.2 + \frac{1}{1.2}\right) = 1.016,$$

or the new slope must be 1.6 per cent greater than the old. It is left to the student to plot the curve and to prove that it is an hyperbola; also to find the direction and the magnitude of its axes.

Prob. 3. — A channel should have a depth h and a width $2h$. For certain reasons the depth must be changed to ph, and in order to preserve the same rate of discharge at the same slope the area of cross section must be increased r times. Find the relationship between p and r. *Ans.* $r^3 = \frac{1}{2}(p + r/p)$.

Prob. 4. — If in the preceding problem the area be kept constant, the discharge decreases, so that if the original rate of discharge is q, the new rate is $q' = uq$. Find the relationship between p and u. *Ans.* $u^2 = 2p/(p^2 + 1)$.

* In reality c varies somewhat with many factors, but in these problems it is assumed to be constant.

Prob. 5. — In a rectangular canal of width b, the depth of water is different at different times. Deduce an equation and plot a curve between the depth of water h and the average velocity of flow v. Assume the velocity at $h = \frac{1}{2} b$ to be unity. *Ans.* $v^2 = \dfrac{4\,h/b}{2\,h/b + 1}$.

Prob. 6. — In a rectangular canal of width b, the depth of water is different at different times. When $h = \frac{1}{2} b$, $Q = Q_0$. Deduce the equation and indicate the general character of the curve between the depth of water h and the corresponding rate of discharge Q.

Ans. $\dfrac{Q^2}{Q_0^2} = \dfrac{16\,h^3/b^3}{2\,h/b + 1}$.

When a canal is dug in the ground, it usually has a trapezoidal cross section (Fig. 42) in order to prevent

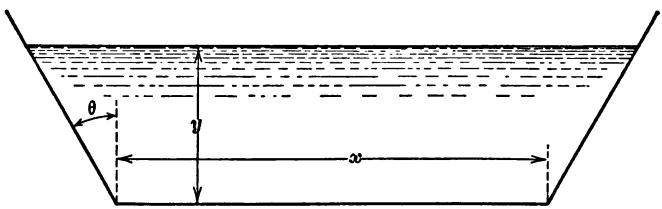

FIG. 42. — A trapezoidal canal.

its banks from sliding. The area of the cross section is

$$A = y\,(x + y \tan \theta), \quad . \quad . \quad . \quad . \quad (4)$$

and the wetted perimeter is

$$P = x + \frac{2\,y}{\cos \theta}. \quad . \quad . \quad . \quad . \quad . \quad (5)$$

The cross section is determined by three parameters, x, y, and θ, and as long as none of them are given, the problem of designing the best cross section remains indefinite. The two conditions, $A \doteq$ const. and $P =$ min., are not sufficient to make the problem definite. In practice, however, either θ is given, according to the character of the soil or of the lining, or else the depth y is prescribed. Sometimes the minimum width

on the bottom is prescribed, for instance, of such a size that two barges may pass by one another. We shall consider these cases separately in some of the following problems.

Prob. 7. — Find the best dimensions for a trapezoidal canal, the slope of the banks being given. *Solution.* — In Eqs. (4) and (5) angle θ must be considered constant, and we have:

$$dA = (x + y \tan \theta)\, dy + y\,(dx + \tan \theta \cdot dy) = 0;$$
$$dP = dx + 2\, dy/\cos \theta = 0.$$

Eliminating dx and dy from these equations gives one equation between x and y. Relation (4) is the other necessary equation.

Ans. $y^2 = A \cos \theta/(2 - \sin \theta)$.

Prob. 8. — On the same base line and to the same scale draw trapezoidal cross sections of canals for minimum friction and for the slopes of the banks equal to 2 : 1, 1.5 : 1, 1 : 1 and 0.5 : 1, respectively. The area of the canal is to be the same in all cases; use the answer to the preceding problem. A slope of 2 : 1 means that for every two feet of horizontal projection the surface rises one foot.

Prob. 9. — Solve Prob. 7 when the width at the bottom is given instead of the slope. *Solution.* — Differentiating Eqs. (4) and (5), and considering x to be constant, we obtain:

$$dA = (x + y \tan \theta)\, dy + y\,(\tan \theta\, dy + y\, d\theta/\cos^2 \theta) = 0;$$
$$dP = 2\, dy/\cos \theta + 2\, y \sin \theta\, d\theta/\cos^2 \theta = 0.$$

Eliminating dy and $d\theta$ from these equations gives an equation between y and θ, which being solved with Eq. (4) gives the values of the unknown quantities. It is left to the student to obtain the final expressions for y and θ. *Ans.* $y^4 + Axy = A^2$.

Prob. 10. — Solve Prob. 7 when the depth y of the channel is fixed, instead of the slope. *Ans.* $x = A/y - y/\sqrt{3}$.

Prob. 11. — Express Eqs. (4) and (5) directly through the slope $n = \tan \theta$, and solve Probs. 7 to 10 in this form.

Prob. 12. — Solve Prob. 7, when the slope of the two banks is different. *Ans.* $2A = y^2\{(2 - \sin \theta_1)/\cos \theta_1 + (2 - \sin \theta_2)/\cos \theta_2\}$.

Prob. 13. — For a trapezoidal channel with a given width at the bottom and with a given slope of the sides (the slope may be

different for the two banks) find the depth of water at which the average velocity of flow is a maximum.

Ans. $y^2 + \dfrac{2xy}{\sec\theta_1 + \sec\theta_2} + \dfrac{2x^2}{(\tan\theta_1 + \tan\theta_2)(\sec\theta_1 + \sec\theta_2)} = 0.$

Prob. 14. — Solve Prob. 13 when the bottom line of the cross section is inclined at a given angle α (Fig. 43) to the horizontal.

Ans. $y^2 + 2xy\dfrac{1 - \sin\alpha\sec\theta_2}{\cos\alpha\,(\sec\theta_1 + \sec\theta_2)}$

$$+ x^2\frac{(1-\tan\alpha\tan\theta_2)(2+\sin\alpha\sec\theta_1-\sin\alpha\sec\theta_2)}{\cos\alpha\,(\tan\theta_1 + \tan\theta_2)\,(\sec\theta_1 + \sec\theta_2)} = 0.$$

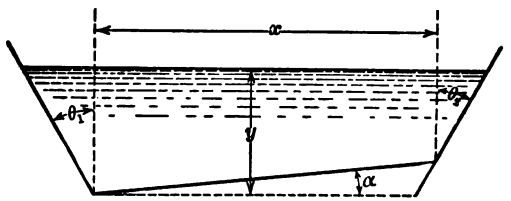

FIG. 43. — A canal in which the bottom line of the cross section is inclined at an angle α to the horizontal.

Prob. 15. — A certain quantity of water is conducted away by a trapezoidal canal of minimum frictional resistance. What would be the per cent saving in excavation if the channel could be given a

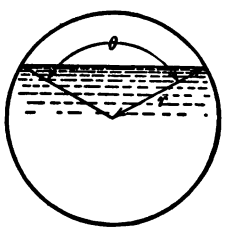

FIG. 44. — A partly filled circular sewer.

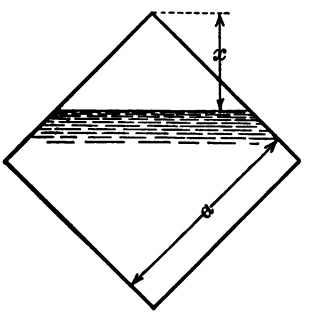

FIG. 45. — A sewer with a square cross section.

semicircular cross section? The longitudinal slope is supposed to be the same in both cases.

Ans. $100 - \left\{\dfrac{\pi r}{x + 2y\sec\theta}\right\}^{\frac{1}{2}} \cdot 100.$

Prob. 16. — For a partly filled circular sewer (Fig. 44) find the level of water at which the velocity is a maximum. *Solution.* —

Let the level be determined by the angle θ. Then the wetted area A = area of the circle − area of the upper segment $= \pi r^2 - \frac{1}{2} r^2 (\theta - \sin\theta)$. The wetted perimeter $P = r(2\pi - \theta)$. The ratio of A to P must be a maximum, or $d(A/P) = 0$. This leads to the condition $A\,dP - P\,dA = 0$. But $dA = -\frac{1}{2} r^2 (1 - \cos\theta)\,d\theta$, and $dP = -r\,d\theta$, so that

$$[\pi r^2 - \tfrac{1}{2} r^2 (\theta - \sin\theta)]\, r\,d\theta = r(2\pi - \theta) \cdot \tfrac{1}{2} r^2 (1 - \cos\theta)\,d\theta,$$

whence $\sin\theta = -(2\pi - \theta)\cos\theta$, or $\tan\theta = -(2\pi - \theta)$. The angle which satisfies this condition is 102.5°.

Prob. 17. — Assume the average velocity of water corresponding to the level in Prob. 16 to be 100 per cent, and plot a curve of average velocities at other levels of water.

Ans. $\theta = 270 \quad 180 \quad 90 \quad 0$ degrees;
$v = 62.1 \quad 91.1 \quad 98.1 \quad 91.1$ per cent.

Prob. 18. — Solve Prob. 16 when the level must be such as to give a maximum rate of discharge. *Hint.* — According to Eq. (3), A^3/P must be a maximum. *Ans.* $\theta = 52°$.

Prob. 19. — Assuming the maximum discharge deduced in the preceding problem to be 100 per cent, plot a curve of rate of discharge at other levels.

Ans. $\theta = 270 \quad 180 \quad 90 \quad 60 \quad 0$ degrees;
$Q = 5.21 \quad 47.8 \quad 95 \quad 99.5 \quad 95.3$ per cent.

Prob. 20. — Solve Probs. 17 to 20 in application to a square cross section with a vertical diagonal (Fig. 45). *Hint.* $A = a^2 - x^2$; $P = 4a - 2x\sqrt{2}$ (from $x = a/\sqrt{2}$ to $x = 0$).

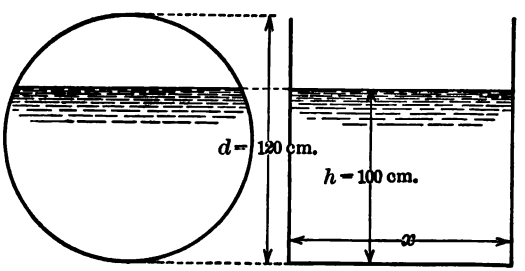

FIG. 46. — A circular aqueduct and a corresponding rectangular canal.

Prob. 21. — A circular aqueduct (Fig. 46) of diameter $d = 120$ cm. carries water to a level $h = 100$ cm. For a part of the length it is necessary to change the section to an open rectangular section.

Calculate the width x of this section such that at the same slope the water would flow at the same height h. *Hint.* — The expression A^3/P must be the same for both cross sections. *Ans.* 104 cm.

Prob. 22. — An egg-shaped sewer (Fig. 47) is determined by the dimensions $r = 0.25$ m., $R = 0.585$ m., and $l = 1.5$ m. The middle part is formed by two arcs of circles tangent to the upper

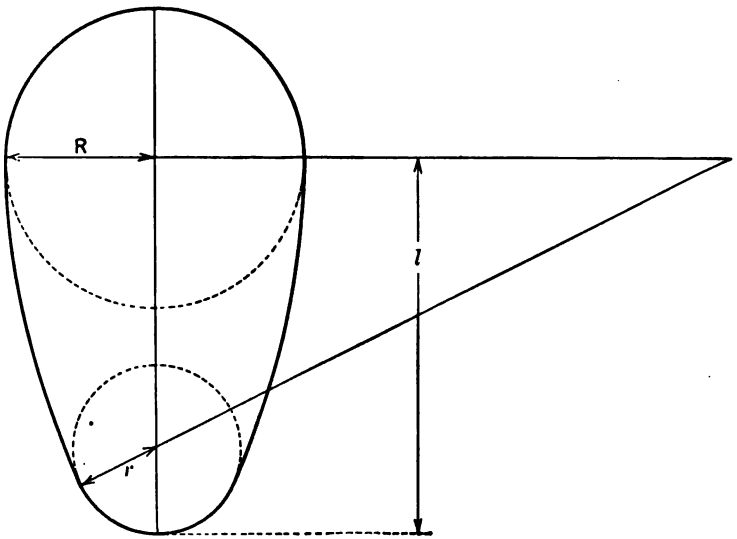

FIG. 47. — An egg-shaped sewer.

circle at the horizontal diameter and to the lower circle. Find algebraic expressions for, and plot curves of A and P for different levels of water above and below the center of the upper circle. Find whether the ratio A/P, and consequently the average velocity of flow, remains sensibly constant within wide limits of water level.

Ans. $H = 1.0$; $A = 0.38$; $P = 1.22$; $A/P = 0.312$.
$H = 2.0$; $A = 0.85$; $P = 2.46$; $A/P = 0.345$.

Prob. 23. — The cross section of a canal is a cycloid (Fig. 48) formed by rolling a circle of radius ρ on the base line MN. The equation of the cycloid is $x = \rho(\alpha - \sin\alpha)$, and $y = \rho(1 - \cos\alpha)$, where α is the variable angle of rotation of the circle. Find the area A of the cross section MNT, the wetted perimeter P, and the ratio A/P. *Ans.* $A = 3\pi\rho^2$; $P = 8\rho$; $A/P = 3\pi\rho/8$.

Prob. 24. — Find analytic expressions for, and draw curves of velocity and discharge at different partial levels of water for the cycloidal section in the preceding problem; assume the velocity and the discharge at full section MN to be 100 per cent. *Hint.* —

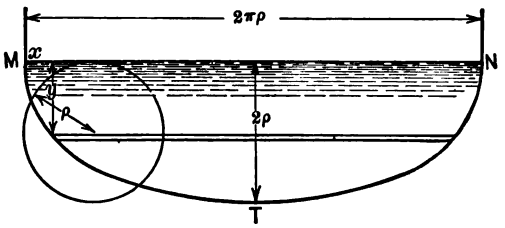

FIG. 48. — Cycloidal section of a canal.

The area of an infinitesimal horizontal strip is $2(\pi\rho - x)\,dy$; the limits of integration are y and 2ρ, or α and π. In integrating to find the perimeter remember that $\sin \frac{1}{2}\alpha = \sqrt{\frac{1}{2}(1 - \cos\alpha)}$.

Ans. $v = 46.1\sqrt{m/\cos\frac{1}{2}\alpha}$; $Q = 9.76\sqrt{m^3/\cos\frac{1}{2}\alpha}$, where

$$m = \alpha\cos\alpha - \tfrac{1}{2}(\pi - \alpha) - \pi\cos\alpha - \sin\alpha - \tfrac{1}{4}\sin 2\alpha.$$

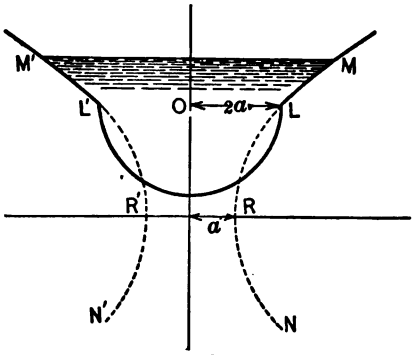

FIG. 49. — Section of a canal formed by a semicircle and two catenaries.

Prob. 25. — The section of a canal is formed by a semicircle of radius $2a$ (Fig. 49), and by parts of catenaries MRN and $M'R'N'$, whose equation is

$$\pm x = \tfrac{1}{2}a\,(e^{y/a} + e^{-y/a}),$$

where e is the base of the natural logarithms. Show that as long as the level of water remains above the center of the semicircle, the mean velocity of flow is constant.

Solution. — The mean velocity depends on the ratio of A to P. For the catenary part of the section we have:

$$dA_c = 2\,x\,dy = a\,(e^{y/a} + e^{-y/a})\,dy;$$
$$dP_c = 2\sqrt{(dy)^2 + (dx)^2} = 2\sqrt{(dy)^2 + \tfrac{1}{4}\,(e^{y/a} - e^{-y/a})^2\,(dy)^2}$$
$$= 2\sqrt{1 + \tfrac{1}{4}\,(e^{2y/a} + e^{-2y/a} - 2)}\cdot dy,$$

or $dP_c = (e^{y/a} + e^{-y/a})\,dy$.

Consequently, $dA_c = a\,dP_c$, or, integrating between the levels LL' and MM', we find that $A_c = aP_c$. Therefore, for the whole cross section,

$$\frac{A}{P} = \frac{2\,\pi a^2 + aP_c}{2\,\pi a + P_c} = a = \text{const.} \quad . \quad . \quad . \quad . \quad . \quad (6)$$

Note 1. — The problem is more readily solved by using hyperbolic functions. The equation of the catenaries becomes $\pm\,x = a\cosh(y/a)$, and we have:

$$dA_c = 2\,a\cosh(y/a)\,dy;$$

$dP_c = 2\sqrt{1 + (dx/dy)^2}\cdot dx = 2\sqrt{1 + \sinh^2(y/a)}\cdot dx = 2\cosh(y/a)$; so that $dA_c = a\,dP_c$.

Note 2. — The condition that the average velocity of flow should be as nearly as possible independent of the level of water in the canal is important for two reasons. At low velocities suspended matter is liable to settle on the bottom, especially in the case of a sewer. If the velocity is too high the material of the walls of the canal is liable to be washed out. Unless the shape of the cross section is specially proportioned, the velocity is liable to be insufficient at low levels and too great at high levels.

Prob. 26. — Show that the condition $dA_c = a\,dP_c$, deduced in the preceding problem also holds true for a more general form of exponential curve

$$\pm\,x = \frac{1}{2\,b}\,(b^2e^{y/a} + a^2e^{-y/a}), \quad . \quad . \quad . \quad . \quad . \quad (7)$$

of which the curve of Prob. 25 is a special case, when $a = b$. *Note.* — The same curve expressed in hyperbolic functions is

$$y = a\,[\cosh^{-1}(x/a) - \cosh^{-1}(c/a)], \quad . \quad . \quad . \quad . \quad (8)$$

where c is a constant which may be expressed through b (see Prob. 28). The problem is more easily solved using hyperbolic functions.

Prob. 27. — Show that in Fig. 49 the lower part of the canal need not be a semicircle, but may be any section whatsoever, provided that the ratio of the cross section to the wetted perimeter of the lower part is equal to coefficient a in Eqs. (6), (7), and (8). *Solution.* — Let A_l and P_l be the area and the wetted perimeter of the lower part, and let A_u and P_u refer to the upper part. The condition that the average velocity be constant is

$$\frac{A_l + A_u}{P_l + P_u} = \text{const.}$$

This equation must hold true at the lower limit when A_u and P_u are equal to zero. Hence

$$\frac{A_l + A_u}{P_l + P_u} = \frac{A_l}{P_l},$$

or, after reduction, $A_l/P_l = A_u/P_u$. But by supposition the upper part of the section is shaped by a curve such that $A_u = aP_u$ (see Probs. 25 and 26 above). Hence, $A_l/P_l = a$, which was to be proved.

Prob. 28. — Deduce the most general equation for the upper curve in Fig. 49, to satisfy the condition $dA = a\,dP$. It has been shown in the preceding problems that with this condition fulfilled the average velocity of the water is practically independent of its level. *Solution.* — The given condition may be written in the form $x\,dy = a\sqrt{1 + (dx/dy)^2} \cdot dy$, or canceling dy and squaring, $x^2 = a^2 + a^2\,(dx/dy)^2$. Retaining the plus sign only, we get

$$dy = \frac{a\,dx}{\sqrt{x^2 - a^2}}. \quad . \quad . \quad . \quad . \quad . \quad . \quad . \quad . \quad (9)$$

Integrating this, we obtain

$$y = a \log (x + \sqrt{x^2 - a^2}) + \text{const.} \quad . \quad . \quad . \quad (10)$$

Let the width of the cross section at LL' be $2\,c$, and let the new origin be at point O. Then the constant of integration is determined by the condition that $y = 0$ when $x = c$. Therefore

$$y = a \log \left\{ \frac{x + \sqrt{x^2 - a^2}}{c + \sqrt{c^2 - a^2}} \right\}. \quad . \quad . \quad . \quad . \quad . \quad . \quad (11)$$

Introducing, for the sake of abbreviation,

$$b = c + \sqrt{c^2 - a^2}, \quad . \quad . \quad . \quad . \quad . \quad . \quad . \quad (12)$$

and getting rid of the logarithm, Eq. (7) is obtained, which is thus the most general possible form of the curve. *Note.* — The integral of Eq. (9) in hyperbolic functions is $y = a \cosh^{-1}(x/a) + \text{const.}$, the constant being determined from the condition that $y = 0$ when $x = c$. Eq. (8) then follows directly, thus showing again the advantage in using hyperbolic functions.

Problems on Minimum Cost of Excavation.

When water is used for power or irrigation purposes, it is sometimes necessary to divert part of a stream at a smaller slope so as to create a hydraulic head or difference of levels (Fig. 50). Let AB represent the longitudinal profile of the surface of a stream having a grade I, and let it be required to have some water power

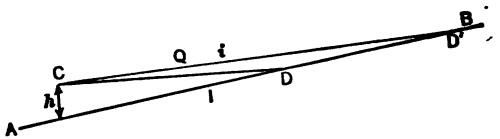

FIG. 50. — A river with a derivative canal at a lesser slope.

at C, at a head h above the stream, the rate of consumption of water or the discharge being Q. The water is to be obtained by means of an open canal branching from the stream at D and running to C at a lesser grade i.* The problem is to determine point D so that the cost of excavation of the canal, or the amount of material to be removed, will be a minimum.

That there is such a minimum will be seen by taking a point D' further up stream. Canal CD' would be longer than CD, but would have a smaller cross section since its grade is greater and consequently water would flow through it at a higher velocity. On the contrary, taking a point nearer than D, the length of the canal is reduced, but the slope is reduced also;

* For a similar treatment involving closed pipes see Problems 48 and 49 in the preceding chapter.

consequently the canal would have to have a larger cross section, and the volume of excavation may be larger than for a longer canal.

Let us consider first the case of a rectangular canal so shaped as to possess the most advantageous cross section. According to Prob. 1, if the depth of such a canal is y, its width is $2\,y$, so that Eq. (3) becomes

$$Q = c \cdot 2\,y^2 \sqrt{\tfrac{1}{2}\,iy}. \quad . \quad . \quad . \quad . \quad (13)$$

The length of the canal is determined by its slope; namely, the difference of the levels between the river and the canal increases by $(I - i)$ per unit length. Therefore

$$L\,(I - i) = h, \quad . \quad . \quad . \quad . \quad . \quad (14)$$

where L is the length of the canal. The condition of minimum excavation is

$$AL = \frac{2\,y^2 \cdot h}{I - i} = \text{min.} \quad . \quad . \quad . \quad . \quad (15)$$

Substituting the value of y from Eq. (13) and combining all the constants into one, we get

$$\frac{\text{const.}}{i^{\frac{2}{5}}\,(I - i)} = \text{min.}$$

In order that this expression may be a minimum, its denominator must be a maximum, or

$$i^{\frac{2}{5}}\,(I - i) = \text{max.} \quad . \quad . \quad . \quad . \quad (16)$$

Differentiating with respect to i and equating the derivative to zero, we get

$$\tfrac{2}{5}\,i^{-\frac{3}{5}}\,(I - i) - i^{\frac{2}{5}} = 0.$$

Multiplying this equation by $i^{\frac{3}{5}}$ and solving for i we obtain

$$i = \tfrac{2}{7}\,I. \quad . \quad . \quad . \quad . \quad . \quad . \quad (17)$$

Thus, the most economical grade for the canal is equal to $\frac{2}{7}$ of that of the stream. The result can also be obtained without differentiation by using theorem 4 in the Appendix.

Prob. 29. — Investigate the influence of the grade upon the cost of excavation, that is, plot to values of grade around $\frac{2}{7}$ as abscissæ the corresponding values of length, cross section, and volume of excavation. Assume the values corresponding to the most economical slope to be equal to 100 per cent.

Ans. $i/I = 0.2$; cost = 103.1 per cent;
$i/I = 0.4$; cost = 104 per cent.

Prob. 30. — Show that Eq. (17) is also true for a semicircular canal.

Prob. 31. — Show that Eq. (17) is true for a trapezoidal section satisfying the condition expressed in Prob. (7).

Prob. 32. — Show that Eq. (17) holds true for any cross section whatsoever, provided that it is completely determined by one of its dimensions. *Hint.* — Let z be this dimension; then $A = mz^2$, $P = nz$.

Prob. 33. — Determine the most economical longitudinal grade for a rectangular canal when its depth y is given, so that the condition $x = 2y$ cannot be fulfilled. *Hint.* — It is easier in this case to solve Eq. (3) for i; substitute its value into the equation corresponding to Eq. (15). Having found the width x, i can be found from Eq. (3).

Ans. The equation for x is $Ic^2y^3x^3 = 8\,Q^2y + 3\,Q^2x$.

APPENDIX.

In many practical problems the product of two variables must be constant, while their sum must be a minimum. The mathematical problem is therefore to find the values of u and v that satisfy the conditions

$$uv = C = \text{const.};$$
$$u + v = \text{min.}$$

Substituting the value of v from the first equation into the second, we obtain

$$u + C/u = \text{min.}$$

Equating the first derivative to zero, we get

$$1 - C/u^2 = 0,$$

or $u = \sqrt{C}$; consequently $v = \sqrt{C}$. We thus arrive at the following result:

Theorem 1. — *When the product of two variables is constant, their sum is a minimum when the variables are equal to each other.*

Knowing this theorem, it is not necessary to differentiate in each particular problem, but the solution may be written directly. See, for example, the third solution to Prob. 1 in Chapter VI.

Sometimes the variables satisfy a more general condition

$$u^m v^n = C = \text{const.}, \quad . \quad . \quad . \quad . \quad . \quad (1)$$

and the expression to be made a minimum is of the form

$$u^p + v^q = \text{min.}, \quad . \quad . \quad . \quad . \quad . \quad (2)$$

where m, n, p and q are known constants.

The total differential of the first expression is equal to zero, because the expression itself is a constant; the total differential of the second expression is also equal to zero, because the expression must be a minimum. We thus have

$$mu^{m-1}v^n\,du + nu^m v^{n-1}\,dv = 0;$$
$$pu^{p-1}\,du + qv^{q-1}\,dv = 0.$$

Eliminating du and dv, and simplifying, we get

$$\frac{u^p}{v^q} = \frac{mq}{np}. \quad . \quad . \quad . \quad . \quad . \quad . \quad . \quad (3)$$

The values of u and v are obtained by solving Eqs. (1) and (3) as simultaneous equations. This result we shall call

Theorem 2. — *When two variables satisfy condition* (1), *and expression* (2) *must be a minimum, the values of the variables must satisfy Eq.* (3).

In some problems the sum of two variables is constant, and their product must be a maximum; for instance, when it is required to find a rectangle of maximum area, the perimeter being given. The conditions are:

$$u + v = \text{const.};$$
$$uv = \text{max.}$$

Proceeding as in the proof of Theorem 1, we get

Theorem 3. — *When the sum of two variables is constant, their product is a maximum when the variables are equal to each other.*

In a more general case we may have:

$$u^m + v^n = \text{const.}, \quad . \quad . \quad . \quad . \quad . \quad (4)$$
$$u^p v^q = \text{max.} \quad . \quad . \quad . \quad . \quad . \quad (5)$$

Proceeding as in the case of Theorem 2, we derive the following theorem:

Theorem 4. — *When two variables satisfy condition* (4), *and expression* (5) *must be a maximum, the values of the variables must be such that*

$$\frac{u^m}{v^n} = \frac{np}{mq}. \quad . \quad . \quad . \quad . \quad . \quad . \quad . \quad (6)$$

Result (17) in Chapter VI may be obtained directly from Eq. (16) on the basis of this theorem. The student will find throughout the book a number of other problems on maxima and minima in which the actual differentiation can be avoided by using one of these four theorems.

Strictly speaking, in order to complete the proofs it is necessary to show that the critical values of the variables found above correspond to a minimum or a maximum respectively. This may be done by considering the sign of the second derivative, by interpreting the results geometrically or perhaps by some special reasoning.

BOOKS ON HYDRAULICS

Bovey, H. T. ..... Wiley
Bowser, E. A. ..... Van Nostrand
Dariès, G. ..... Gauthier-Villars
Fidler, T. C. ..... Longmans
Flamant, A. ..... Baudry
Gibson, A. H. ..... Van Nostrand
Hoskins, L. M. ..... Holt
Hughes, H. J. & Safford, A. T. ..... Macmillan
Lea, F. C. ..... Longmans
Merriman, M. ..... Wiley
Russell, G. E. ..... Holt
Slocum, S. E. ..... McGraw-Hill
Unwin, W. C. ..... Macmillan

JUL 28 1916